BUILDING ERECTION

Alliance Steel, Inc.
3333 S. Council Road
Oklahoma City, OK 73179-4410
www.allianceokc.com

Date: October 2003
© 2003 Alliance Steel, Inc.

INDEX

1.0 GENERAL
1.1 Purpose of the Erection Guide 4
1.2 Customer's Responsibility 4
1.3 Erector's Responsibility 4
1.4 Safety 5
1.5 OSHA 5
1.6 Credentials 5
1.7 Qualifications 5
2.0 ERECTION BASICS
2.1 Safety Equipment 6
2.2 Structural Fasteners 7
2.3 Panel Fasteners 8
2.4 Sheet Metal Cutting Basics 9
2.5 Sealants 9
2.6 Insulation 10
3.0 RECOMMENDED BASIC TOOL PACKAGE
3.1 5-7 Man Erection Work Crews 11
4.0 SITE PREPARATION
4.1 Responsibility 13
4.2 Completed Foundation 13
4.3 Delivery Access 13
4.4 Material Storage 13
4.5 Erection Access 13
4.6 Safety 13
5.0 FOUNDATION PREPARATION
5.1 Alliance Submittals 14
5.2 Foundation Design 14
5.3 Check the Foundation 14
6.0 RECEIVING MATERIALS
6.1 Inspection and Inventory 15
6.2 Unloading and Staging 15
7.0 STRUCTURAL FRAMING GENERAL INFORMATION
7.1 Typical Rigid Frame Variations 17
7.2 Rigid Frame Components 18
7.3 Frame Erection Sequence 19
8.0 RIGID FRAME ERECTION
8.1 Column Preparation 20
8.2 Setting the Columns 20
8.3 Install Eave Strut and Girts 21
8.4 Setting Columns on Opposite Side 22
8.5 Assemble the Rafters 22
8.6 Hoisting the Rafters 23
8.7 Setting the Rafters 24
8.8 Connecting the Rafters to the Columns 24
8.9 Tie Off Frames 25
8.10 Install Purlins 25
8.11 Install Diagonal Bracing 26
8.12 Frame Alignment 27
8.13 Assemble the End Frame 28
8.14 Setting the End Frame 29
8.15 Complete the End Bay 30
8.16 Erect the Remaining Bays 31

INDEX (Continued)

9.0 WALL AND ROOF PANEL GENERAL INFORMATION
9.1 Panel Description 32
9.2 Panel Erection Planning 32
10.0 WALL PANEL INSTALLATION
10.1 Preparing the Structure 33
10.2 Marking Panel Layout 33
10.3 Pre-Drilling Panels 34
10.4 Starting the Insulation 35
10.5 Install the First Panel 36
10.6 Installing the Next Panel 37
10.7 Complete the Wall 38
11.0 ROOF PANEL INSTALLATION
11.1 Preparing the Structure 39
11.2 Install the Eave Trim 40
11.3 Roof Sheeting Layout 41
11.4 Pre-Drilling Panlels 42
11.5 Starting the Insulation 43
11.6 Installing the Eave Closures 45
11.7 Position the First Panel 46
11.8 Fasten the First Panel 47
11.9 Install Sealant on First Panel 48
11.10 Position and Fasten the Second Panel 49
11.11 Install Sealant on Second Panel 50
11.12 Complete the Panel Run 51
11.13 Position and Fasten the Ridge Cap 51
11.14 Preparation for Next Panel Run 52
11.15 Install Next Down-Slope Panel 52
11.16 Install Tape Sealant 53
11.17 Install the Next Up-Slope Panel 54
11.18 Install Tape Sealant 55
11.19 Install Ridge Cap 56
11.20 Check Panel Coverage 57
11.21 Complete Panel Installation 57
12.0 PERIMETER TRIM INSTALLATION
12.1 Installation Sequence 58
12.2 Install Optional Eave Trim Closures (If Req'd) 59
12.3 Install the Eave Gutter 60
12.4 Install Rake Trim 63
13.0 WALL ACCESSORIES
13.1 Framed Opening Types 67
13.2 General 68
13.3 Set Anchor Bolts 68
13.4 Preparation of Jambs 69
13.5 Erect the Framing 69
13.6 Install Walk Door Framing 71
13.7 Install Cover Trim (Optional) 71
13.8 Framed Opening Sheeting and Trim 72
13.9 Window and Louver Sheeting 74

INDEX (Continued)

14.0 ROOF ACCESSORIES
14.1 Ridge Ventilators - General 76
14.2 Prepare Ridge Opening 77
14.3 Install Ridge Ventilator 78
14.4 Skylights - General 79
14.5 Install Preceding Roof Panels 79
14.6 Install Skylight Panel 80
14.7 Complete Roof Panel Installation 81
14.8 Reinforcement Straps and Channels 82
14.9 Fasten the Skylight 83
APPENDIX A
MBMA's Construction Site Safety Information 84

1.0 GENERAL

1.1 Purpose of the Erection Guide

This erection guide is provided to Alliance Steel customers and their erectors as the recommended procedures for the correct field assembly of Alliance pre-engineered metal buildings.

This guide is intended to be used in conjunction with the project's erection drawings to help plan and organize the erection of the Alliance metal building. The erection drawings identify the applicable building conditions and govern specific part arrangements. The instructions in this erection guide will help you identify parts, establish the installation sequence, demonstrate correct assembly, and point out any areas or procedures requiring special emphasis or attention.

This erection guide applies to the standard Alliance Steel pre-engineered buildings. Custom building conditions, including custom details and instructions, will be covered by the project's erection drawings. In case of conflict between this erection guide and the erection drawings, the erection drawings will take precedence.

1.2 Customer's Responsibility

The customer is responsible for proper assembly of the building in accordance with the erection drawings and this erection guide, and in accordance with good engineering and construction practices and applicable construction codes, standards and regulations.

The customer must take the responsibility for selecting a competent erector, insist that the work be performed by qualified and experienced metal building erectors, and insist that the erector take time to study and understand the project's erection drawings and this erection guide. Then the customer must ensure that the erector correctly follows the erection drawings and erection guide instructions.

Alliance Steel does not guarantee and is not liable for the quality of erection. Alliance is not responsible for building defects that may be attributed to improper erection or the negligence of other parties.

Clarification concerning the erection of an Alliance building should be directed to the Alliance Steel Customer Service Manager.

Contact the Alliance office at:
Alliance Steel, Inc.
3333 South Council Road
Oklahoma City, Oklahoma 73179
(405) 745-7500

1.3 Erector's Responsibility

When erecting an Alliance pre-engineered metal building, you can be assured that the building's components are part of a total system which has been computer designed and precision fabricated to meet the building's design requirements and provide for efficient field assembly. However, the building's in-place performance is primarily dependent of the accuracy of the building's erection.

By studying the erection drawings and this erection guide before the arrival of the steel shipment at the job-site, you can pre-determine the following important requirements:

- The size and scheduling of the work crew.
- The type size and quantity of tools and hoisting equipment.
- Proper planning of the erection procedures and their sequence.
- Identify and pre-solve areas of confusion before committing the work crew and equipment.

1.4 Safety

The erector is responsible for the safe execution of the building erection. The instructions in this guide are intended to describe the sequence and proper placement of parts. They are not intended to prescribe comprehensive safety procedures.

If the erector cannot safely assemble the building in accordance with these instructions, it is the responsibility of the erector to stop the work and contact Alliance to determine alternate assembly procedures.

To assist the contractor in planning for and maintaining safe working conditions, Alliance recommends procurement and study of a special booklet available from the MBMA. The booklet entitled "Construction Site Safety Information" is included in the Miscellaneous Section of this guide.

1.5 OSHA

The Occupational Safety and Health Act (OSHA) has promulgated many regulations applicable to the erection of this or any other building system. These regulations, identified as Part 1926. Safety and Health Regulations for Construction, are available from any government bookstore. The objective of the OSHA standards is to protect the worker from injury or illness. These OSHA regulations should be recognized as jobsite requirements and be fully complied with.

Failure to do so may result in substantial fines in the event of an OSHA inspection. Safe installation practices may be further defined and made mandatory by state or local ordinances.

Maintaining good housekeeping on the job site is recognized as being important to both OSHA compliance and to successful job competition.

1.6 Credentials

Alliance Steel is an active member of the MBMA (Metal Buildings Manufacturers Association). Alliance subscribes to the design criteria of the AISC (American Institute of Steel Construction) and the AISI (American Iron and Steel Institute) and is an AISC-MB certified manufacturer.

Alliance buildings are designed under the supervision of a Registered Professional Engineer.

Alliance building materials are warranted for one year against defects in composition, fabrication, workmanship and against faults inherent in building design.

1.7 Qualifications

Unless specified in writing, Alliance Steel makes no expressed or implied warranties pertaining to the fitness of any particular building or its components for any particular purpose by the owner. Neither shall Alliance be responsible for any indirect or consequential damages, such as to building contents, nor for further loss of any kind to the owner or contractor.

Further, Alliance does not warrant any particular part, product or material as meeting the ordinances, laws or regulations of any particular state or local municipality.

Alliance is not responsible for conformance by the owner or contractor to any particular ordinances, laws or regulations pertaining to (but not limited to) zoning, environmental protection, building codes or safety standards.

2.0 ERECTION BASICS

2.1 Safety

• Safety Equipment

The use of safety equipment for high framing and roof erection is recommended at all times during the erection process. However, when using lanyards, ensure that the clasp, belt hooks and wire cables are covered in such a manner that they will not scratch the surfaces if accidentally dragged along the trim, panels, and painted structurals.

• Placing Materials on the Structure

Do not place bundles of panels or other heavy materials on the roof structure without first verifying the structure will safely support the concentrated weight. Some roof structures may not be designed to support the additional weight of heavy materials without additional structure support.

• False Security of Insulation

Blanket and board insulation blocks the installer's view of the ground below the roof. Serious injury can occur when the installer gets a false sense of security because he cannot see the ground and steps through the insulation.

• Overhanging Materials

Do not stand on the end of unsupported (cantilevered) panels and framing members. Standing on the cantilevered portion may result in collapse and possible injury.

• Point Loads

When properly supported, framing members and panels are designed to support uniform loads which are evenly distributed. Point loads that occur in small or concentrated areas, such as by heavy equipment, ladder or platform feet, etc., may cause deformation or even collapse and possible injury.

• Strong Winds

Do not attempt to move panels in strong winds. Wind pressure can easily cause a man to lose balance and fall. Strong wind uplift on a panel can lift the weight of the man carrying the panel.

Loose, wind borne panels and flashing are very dangerous and can cause severe injury and damage.

• Slick Surfaces

Panel and framing surfaces are hard, smooth, and nonabsorbent which causes these surfaces to be very slick when wet or covered with snow or ice. Even blowing sand or heavy dust can make these surfaces difficult to walk on without slipping.

Unpainted roof panel surfaces are sometimes coated with oil to accommodate the panel-fabrication process. Although designed to wash away or evaporate during normal weather, the oil on new panels can be extremely slick, especially during periods of light rain or dew.

Caution must be exercised to prevent slipping and falling. Non-slip footwear is a necessity and non-slip working platforms are recommended.

• Sharp Edges

Some edges of panels and flashing are razor sharp and can cause severe cuts if proper protective hand gear is not worn. Be careful not to injure others while moving panels and flashing.

• Electrical Conductance

Metal building components are excellent electrical conductors. A common cause of injury is the contact of metal panels and framing members with power lines during handling and installation. The location of all power lines must be noted and, if possible, flagged. The installation process must be routed to avoid accidental contact with all power lines and high voltage services and equipment. All tools and power cords must be properly insulated and grounded and the use of approved ground fault circuit breakers is recommended.

2.2 Structural Fasteners

There are two types of fasteners used at structural connections — high strength bolts & nuts and mild steel bolts & nuts.

- **High Strength Bolts**

High strength bolts and nuts are required at both primary frame and endwall frame column to rafter connections and rafter splice connections. They are also required for for purlin and eave strut connections in certain conditions. See erection drawings for quantity required and proper location. High strength bolts and nuts can be identified by markings as shown below.

- **Mild Steel Bolts**

Mild steel bolts and nuts are used at secondary framing connections such as purlin, girt, and eave strut attachments (except as noted above) to their respective clips. For bypass purlins and girts, one pan head bolt is required for initial connection before the adjacent overlapping purlin or girt is installed. Cadmium plated bolts may be required in places where the bolt is exposed to the elements. Mild steel bolts are identified by the absence of markings as shown below.

- **Hole Alignment**

For proper installation of the bolts, the holes must first be aligned. Use appropriate sized drift pins or spud wrench handle to align a set of holes, then install bolts in the adjacent holes.

Caution: Hammering or threading bolts into misaligned holes will damage the threads and weaken the bolt.

- **Tightening Bolts**

All bolts must be tightened after the framing is installed and aligned.

All high strength bolts must be tightened to to snug tight condition. Rafter sections can be assembled on the ground and bolts properly tightened before hoisting. As other connections are completed, bolts must be tightened to insure that the components function as designed.

Caution: Improper tightening of connection bolts can subject the structural system to failure.

- **Snug Tightening**

All connections used by Alliance Steel are considered to be in the non-slip-critical category and therefore need only be tightened to the snug tight condition. The snug tight condition is defined as the tightness that exists when all plies in a joint are in firm contact. This may be attained by a few impacts of an impact wrench or the full effort of a person using an ordinary spud wrench. Hardened washers are not required except when bolts are installed in oversized holes.

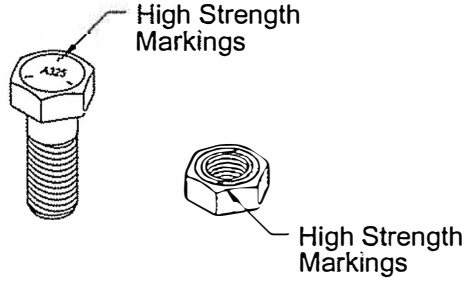

High Strength Bolt and Nut

1/2" Ø x 1" Standard Bolt and Nut

2.3 Panel Fasteners

The following fasteners are the standard fasteners for installing wall and roof panels and flashing.

Specific building conditions may require alternate fasteners. Reference the project's erection drawings for specific fastener requirements.

Caution: The specified fasteners are designed to provide the required performance for the specific applications. Check that the correct fasteners are being used for each application. Do not use substitute fasteners which could result in performance failure of the panel or flashing assembly.

Detail	Description	Location
	Roof and Wall Lap Fastener #14 x 7/8" Self Drilling Screw with Sealing Washer	
	Roof and Wall Structural Fastener #12 x 1 1/4" Self Drilling Screw with Sealing Washer	
	Trim Fastener 1/8" dia. Pop Rivet	

- **Screw Gun**

Use torque control screw guns for driving self-drilling screws. 2000-2500 RPM screw gun speeds are necessary to attain efficient drilling speeds. High tool amperage (4 to 7 AMP) is required to achieve the proper torque for secure fastening.

- **Sockets**

Use good quality magnetic sockets. Good fitting sockets reduce wobble and stripping of the screw heads, especially the alloy and capped heads. They also minimize objectionable paint chipping and scuffing on colored screws and minimize damage to the protective coating on unpainted screws.

Magnetic sockets collect drill shavings which will build up and eventually prevent the socket from seating properly on the screw heads. One method of removing the drill shavings is to roll up a ball of tape sealant and push the socket into the sealant. When the socket is removed from the sealant, most of the drill shavings will remain embedded in the sealant thereby cleaning the socket. This process should be repeated as often as needed to keep the socket clear of drill shavings.

- **Assembly**

Before starting the screw, the materials to be joined must be pressed together with foot or hand pressure. The pressure must be maintained until the screw has drilled through all the materials and the threads have engaged.

- **Drilling Pressure**

Most self-drilling screws require 20 pounds of pressure to maintain the drilling action and to start the thread cutting action. Also, applying such pressure before starting the screw gun will usually prevent tip walking or wandering. If too little pressure is applied, the drill point may not cut into the metal and the point will heat up and become dull. If the pressure is too heavy, the bottom material may be deflected away causing a standoff condition, or the drill tip may be broken or split. Screws must always be held perpendicular to the panel or flashing surface during starting and driving.

- **Correct Seating**

For proper seating of the fastener sealing washer, the panel or flashing surface must be clean and drill shavings must be removed from under washers before seating. The fastener must be driven perpendicular to the panel surface so that the washer can seat level without warping or cupping.

2.3 Panel Fasteners (Continued)

Do not over drive screws. Over driving can strip the thread and /or damage the sealing washer. Use screw guns with torque control set to function properly for the combination of fastener size, hole size and material thickness.

The fastener should be driven tight enough to uniformly compress the washer but not so tight that the washer splits or rolls out from under its metal dome. The recommended procedure is to tighten the fastener until the sealing washer just starts to visually bulge from under the metal dome.

• Replacement Fasteners

As a good installation practice, all installers should carry approved oversized screws. Upon stripping or breaking a screw, the screw must be immediately removed and replaced with the appropriate oversized screw. Do not defer screw replacement to be remembered and fixed later, or to be found by the clean-up crew. The majority of such screws will be overlooked until the customer complains of leakage.

2.4 Sheet Metal Cutting Basics

• Abrasive Saw Problems

Abrasive saws (circular saws with friction disks) are not recommended for cutting panels or flashing. Abrasive saws create high heat that may burn away the protective cladding from the panel edge causing the edge to rust.

Also, abrasive saw dust contains fine, hot steel particles, which accumulate on panel and flashing surfaces where they rust and can cause staining and rusting of those surfaces.

Rust caused by abrasive saw damage or abrasive dust particles might be excluded from warranty claims.

• Shearing Methods

It is recommended that panels and flashing be cut with shears to provide a clean, undamaged cut. On shear cut edges, the protective cladding extends to the edge of the cut and is often wiped over the edge to further protect the base metal. Whenever possible, fit the material so that the factory cut edge is exposed and the field cut edge is covered.

When field cutting complex shapes, it is usually easier to cut out a 1" wide strip using both left and right hand shears. The 1" cutout provides clearance to smoothly cut the flats and the clearance to work the shears around tight corners.

• Cutting Templates

When making repetitive cuts it is recommended that a template be made from a piece of drop-off panel or flash to provide fast and accurate marking of the field cut.

• Marking Panels

Avoid marking the panels for cutting, etc., in a manner that will leave visible markings, stains, etc., on the finished roof surface. Use chalk or felt tip ink markers. Do not use graphite (lead) pencils on unpainted panel surfaces, the graphite can cause rusting of the surface.

2.5 Sealants

• Temperature Effects

The surface temperature of panels or flashing must be considered during installation due to the sensitivity of sealants. The recommended installation temperature range is 20° F to 120° F. At colder temperatures, the sealant stiffens resulting in loss of adhesion and compressibility. At hotter temperatures, the sealant becomes too soft for practical handling. On cold but sunny days, the panel or flashing surface may become warm enough to accept the application of a heated sealant even though the air temperature is below 20° F.

When overnight temperatures fall below freezing, the sealant should be stored in a heated room so it will be warm enough to use the following day. On hot days, the sealant cartons should be stored off the roof in a cool and shaded area. While on the roof, sealant rolls should be kept shaded until actual use.

In very cold weather, it is recommended that the fasteners be tightened slowly and only tight enough that the sealant is in full contact with the panel or flashing. Then on the next sunny day, complete the tightening process after the sun warms the panel and flashing surfaces.

2.5 Sealants (Continued)

• Contamination

To assure proper adhesion and sealing, the sealant must have complete contact with adjoining surfaces. Contaminants such as water, oil, dirt, and dust prevent such contact. The panel and flashing surfaces must be dry and thoroughly cleaned of all contaminants. Before applying tape sealant, the sealant should be checked for contaminants. If the sealant surfaces are contaminated, it must not be used.

During cool weather, condensation or light mist can accumulate on the panel and flashing surface and not be easily noticed. It is recommended that sealants always be kept under protective cover and that the panel and flashing surfaces be wiped dry immediately before installation.

Caution: When drying wet panels, a sufficient supply of dry rags must be available. It does no good to wipe the panels with a rag that has become too wet.

• Protective Backing

Tape sealant is provided with a protective paper to reduce contamination and to retain the sealant's shape during application. Incomplete removal of the protective paper will prevent the sealant's adhesion to the panel or flashing surfaces. Always check that the protective paper is completely removed. Do not remove the protective paper until immediately before the panel or flashing is installed over the sealant.

2.6 Insulation

• Insulation Type

If the building has wall or roof insulation, the normal insulation is fiberglass blanket (roll) insulation with a vinyl or foil vapor barrier facing.

• Application

Blanket insulation is installed over the wall and roof framing and is covered with the panels. The insulation is installed with the facing towards the building interior. In the case of cold storage or other special interior environments, check with the building designer for specific insulation requirements.

To avoid wind and rain damage to exposed insulation, the insulation is installed in sequence with the wall and roof panels.

• Side Seams

To seal the vapor barrier facing between adjacent insulation strips, tabs are provided along both edges of the insulation. The tabs are extensions of the facing.

After each strip of insulation is tightened and secured in place, the tabs between the adjacent strips are pulled out and sealed by the roll and staple method.

If other tab sealing methods are used, contact the insulation supplier for instructions.

• Roll Sizes

To coincide with the 3' width of the wall and roof panels the insulation is normally provided in 3' or 6' wide rolls. 4' wide starting rolls may be provided to position the insulation seams ahead of the panel edge. This will provide ready access to roll and staple the tabs.

For walls, the roll lengths must be suitable for providing continuous strips from the base angle to the eave strut or rake angle. For the roof, the roll lengths must provide for continuous strips over the full width of the roof with minimum splices.

For the roof, the roll lengths must provide for continuous strips over full width of the structure with minimum splices.

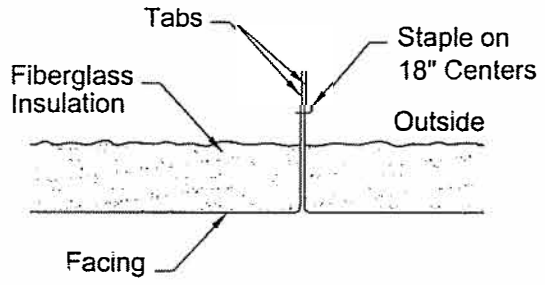

Step 1

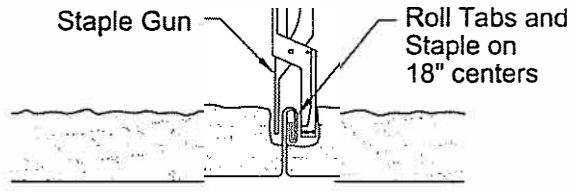

Step 2

3.0 RECOMMENDED BASIC TOOL PACKAGE

MBMA
METAL BUILDING MANUFACTURERS ASSOCIATION

Recommended Basic Tool Package for 5-7 Man Erection Work Crews

This recommended list was developed by the Metal Building Manufacturers Association, Inc., as a starting point. Products manufactured by particular companies may require additional special tools. It is the erector's responsibility to insure that the appropriate tool is used for a given job whether or not that tool appears on his list.

I—HAND TOOLS

On Hand	Quantity Recommended	ITEM
____	4	ASSORTED METAL FILES
____	4-6	BELTS W/BOLT BAGS
		BRUSHES
____	1	Wire
____	2-6	Paint, Miscellaneous
____	4-10	"C" CLAMPS, (6", 9", AND 12")
____	2	CAULKING GUNS (OPEN BARREL)
____	1	CENTER PUNCH
		CHALK LINE
____	2	100'
____	2	Chalk
____	1	COLD CHISEL
____	2-5	DRIFT PINS (BARREL PIN)
		HAMMERS
____	1	Carpenter's Straight Claw
____	2	Ball peen
____	1-2	Sledge (10 lb.)
____	1-3	Rubber
____	1	Welder's Chipping
____	5	HAND TOOL BOX
____	5-11	HARD HATS
		KNIFE
____	1	Pocket
____	2	Putty
		PLIERS
____	2	Side Cutters
____	2	Channel-locks
____	3	Vice Grips, standard
____	5	Vice Grips, welding clamp
____	1-2	PLUMB BOB
____	2-3	POP RIVET GUNS (MANUAL OR ELECTRIC)

On Hand	Quantity Recommended	ITEM
____	1 ea.	REAMER, 9/16", 11/16", 13/16", 15/16"
		SAWS
____	1	Carpenter, Hand
____	1-2	Hack, w/Blades
____	2	SCREWDRIVER SETS, ONE FLAT AND ONE PHILLIPS
____	1	10 pc. Set Nut Drivers
		SNIPS
____	5	Aviation (2 right-hand, 2 left-hand, and one straight cut)
____	1	Large, bulldog
____	1	SPIRIT LEVEL—4' MIN.
		SQUARE
____	1-2	Framing
____	1	Tri
____	4	STAPLE GUNS AND STAPLES (PLIER TYPE)
____	2	STEEL WEDGES
		TAPE
____	1-5	Measuring—25'
____	1	Measuring—100' Min.
____	1 set	THREAD CHASERS—ASSORTED SIZES (½" THROUGH 1¼")
____	1	WRECKING BAR
		WRENCHES
____	5	12" Adjustable
____	2	15" Adjustable
____	6-12	Spud With ¾" Open End
____	1-2	Box End Combination, Set (Size Determined by Bldg. Mfgr.)—Common Sizes 15/16" through 1⅞"
____	1	½" Drive Ratchet and Socket Set w/Various Sizes from ½" to 1¼"
____	1	Hand Ratchet ¾" Square Drive w/18" or 24" "Cheater Bar" and Sockets from ¾" to 1⅞"

II—MATERIALS HANDLING, PLUMBING AND SQUARING EQUIPMENT

On Hand	Quantity Recommended	ITEM
____	12-32	CABLE CLAMPS
		CHOKERS—EYES BOTH ENDS
____	4-6	½" Cable, 10'
____	2	⅝" Cable, 12'
____	4	½" Cable, 10' - 14'
____	2	COME-ALONGS, 2 TON MIN.
		HANDLINES AND TEMPORARY BRACING
____	4-7	½" Dia. Rope, 40' - 60' w/Hooks
____	8	⅜" Dia. Min., Wire Strand Cable—40' Min.
____	4	NYLON SLINGS, 4" WIDE, 10' - 12'
____	1	SPREADER BEAM, 20' WITH HOOK ENDS
____	8	TURNBUCKLES—¾" MIN.

III—POWER TOOLS

On Hand	Quantity Recommended	ITEM
____	1	CUTTING TORCH W/100' HOSE, BOTTLE CART, ACCESSORIES W/FIRE EXTINGUISHER
		DRILLS
____	1	Hammer w/Appropriate Size Bits
____	2-3	Drill, ⅜" Chuck
____	1	Drill, ½" Chuck
____	1-2	Impact Wrench, ½" Drive, and Sockets From ¾" through 1⅞"
____	1	GRINDER
____	1	PORTABLE GENERATOR—2 TO 5 KW., W/110V D.C. AND A.C. SERVICE
____	1	POWDER ACCUATED TOOL KIT
____	1	POWER NIBBLER
____	1	POWER SHEARS
____	4	SCREW GUNS AND SOCKET SETS—PER FASTENER SUPPLIER'S RECOMMENDATIONS
____	1	7½" HEAVY DUTY CIRCULAR SAW W/WOOD AND METAL ABRASIVE BLADE
____	1	WELDING UNIT W/50' GROUND AND 75' LEADS

IV—MISCELLANEOUS

On Hand	Quantity Recommended	ITEM
		BROOMS
____	1-3	Push Type
____	2-4	Warehouse
____	*	BUCKETS
____	1	DOLLY
		EXTENSION CORDS
____	1	#10—3, 2/4-Way Box, 100' Min.
____	2-3	#12—3, 50'
____	1	Ground Fault Interrupter
____	*	FIRE EXTINGUISHERS
____	*	FIRST AID KITS
____	*	5 GAL. WATER COOLER AND DRINKING CUPS
____	1	FLASHLIGHT
		GLOVES
____	10 prs.	Work
____	2 prs.	Welding
____	1-2	5 GAL. GASOLINE CAN W/SAFETY SPOUT
		LADDERS
____	2	Extension, 20' to 40'
____	2-3	Step, 6' to 8'
____	1	LEVEL ROD
____	1-2	MOPS (Water)
____	1	OIL CAN
____	2	ROLLS #9 WIRE
____	3	SAFETY GOGGLES
____	4	SAW HORSES
____	2	SCAFFOLDING—ROLLING TOWERS
____	1	SHOVEL
____	*	SPONGES AND SHOP RAGS
____	1	TRANSIT
____	1	WELDING HOOD WITH SPARE LENS

*—*As required.*

MBMA
METAL BUILDING MANUFACTURERS ASSOCIATION
1230 KEITH BUILDING, CLEVELAND, OHIO 44115-2180

4.0 SITE PREPARATION

4.1 Responsibility

It is the erectors responsibility to provide an accessible, safe and secure building site.

4.2 Completed Foundation

Prior to starting the building erection, the building's foundation must be in-place and in suitable condition to support the building's columns and base angle. Preferably, the floor will be in place and in suitable condition for storage of materials and to provide a level platform for component assembly.

4.3 Delivery Access

Prior to receiving the building materials, there must be proper all-weather road access to the site and to the specific material unloading, storage or erection staging areas.

4.4 Material Storage

The material storage and staging areas must provide for uniform support of the materials, out of standing water or mud, and must be secure from theft and vandalism and protected from damage by equipment operation and traffic. As much as possible, the material must be protected from damage by extreme weather. Sensitive materials such as insulation and sealants must be kept in a shelter, protected from weather and direct sun.

4.5 Erection Access

Prior to the building erection, there must be adequate all weather access around the building perimeter for moving the building materials and erection equipment as needed for efficient and safe erection of the building.

4.6 Safety

High risk conditions such as gas lines and power lines must be properly flagged or the erection traffic must be routed to avoid such high risk areas.

Power cords for erection tools and equipment must be properly routed and circuit protected to provide safe use and must be of sufficient capacity for the equipment and distance requirements.

Pedestrian and vehicle traffic must be routed safely around potential falling framing and roof materials, and from potential windblown materials.

5.0 FOUNDATION PREPARATION

5.1 Alliance Submittals

For an Alliance metal building, Alliance provides the building's foundation plan, anchor bolt layout and frame column reactions.

5.2 Foundation Design

The customer is responsible for design of the foundation in accordance with the building's design requirements, site and soil conditions and the building's anchor bolt layout.

5.3 Check the Foundation

It is good practice to check the foundation forms and anchor bolt settings before the foundation is poured. Even if you are only the building erector, and not the concrete contractor, it is still in your best interest to check the foundation and anchor bolt settings prior to pouring. This is the time to discover and correct errors. After the concrete is poured, corrections can be very costly.

- Check the forms and anchor bolt spacings for "Hold Dimensions" against the anchor bolt drawing.
- Check that the foundation lines are straight and square.
- Check that the column pads are level and at the correct elevations.
- Check that the sheeting ledges are straight and level and at required locations.
- Check that doorway pads and ramps are correctly positioned.
- Prior to starting the building erection, again check the foundation and anchor bolt settings.
- Check for any significant settling that may have occurred after the concrete was poured.
- Chip away any raised areas or projections that may interfere with column or base angle placement.
- Chip away any raised areas or projections in the sheeting ledge that may interfere with wall panel placement.
- Straighten bent anchor bolts and clean fouled anchor bolt threads.

6.0 RECEIVING MATERIALS

6.1 Inspection and Inventory

• Carrier's Responsibility

The building materials are carefully inspected and crated before leaving the Alliance plant and accepted by the transportation company as begin complete and in good condition. It is the carrier's responsibility to deliver the shipment intact.

• Information Package

A package delivered with the shipment contains the erection drawings, bill of materials, and all other necessary paperwork.

• Inspect the Shipment

It is the consignee's responsibility to inspect the shipment for loss, damages and shortages when it is delivered.

It is essential to double-check each load to make sure that all items listed on the shipment waybill are delivered.

• Reporting

Any discrepancies such as damaged or missing items should be noted on the waybill, and reported immediately to Alliance so that replacement can be made with minimum disruption or delay of erection the schedule.

6.2 Unloading and Staging

• Stage Materials

The careful unloading of building components and strategic staging of the components around the building site is critical for erection efficiency and minimum material damage. By spot placement of components nearest their final use point, you will substantially reduce material handling time and labor.

• Crane Access

Plan access and set-up areas so crane equipment can be fully utilized and down time kept to a minimum.

• End Access

Be sure to leave one endwall area of the foundation clear for access of hoisting equipment. To prevent chipping of the foundation edge from crane or truck traffic, construct a temporary access ramp of timbers.

• Staging Layout

Shown below is a typical building component staging layout for minimum material handling and maximum erection efficiency.

To protect components against unloading damage and the weather, the following procedures are recommended.

• Hoist Materials

Always hoist or lift structural members, crates and bundles from truck. *DO NOT ROLL OR DROP OFF COMPONENTS TO GROUND.*

• Slings and Spreaders

Use the proper slings and spreader bars as necessary to prevent bending or crushing damage.

• Blocking

Place columns, rafters and crated components on wood planking or other blocking to prevent contact with the ground. Be sure the blocking is properly spaced and elevated to prevent sagging or bending of the components. Rigid frame columns and rafter sections should be laid on their flanged edges.

• Drainage

To permit drainage of any rainwater during storage, block one end of the structural member, panel bundles or crated components higher than the other end.

• Cover Panels

If panel bundles are to be stored outside for any extended periods, cover the bundles with polyethylene film or other waterproof cover. To prevent condensation, be sure any waterproof covering does not seal off the bundle from air circulation.

• Long Term Storage

Material that will not be used during the erection of the framing should be stored in areas that offer protection from physical damage and covered to provide protection from the weather.

6.2 Unloading and Staging (Continued)

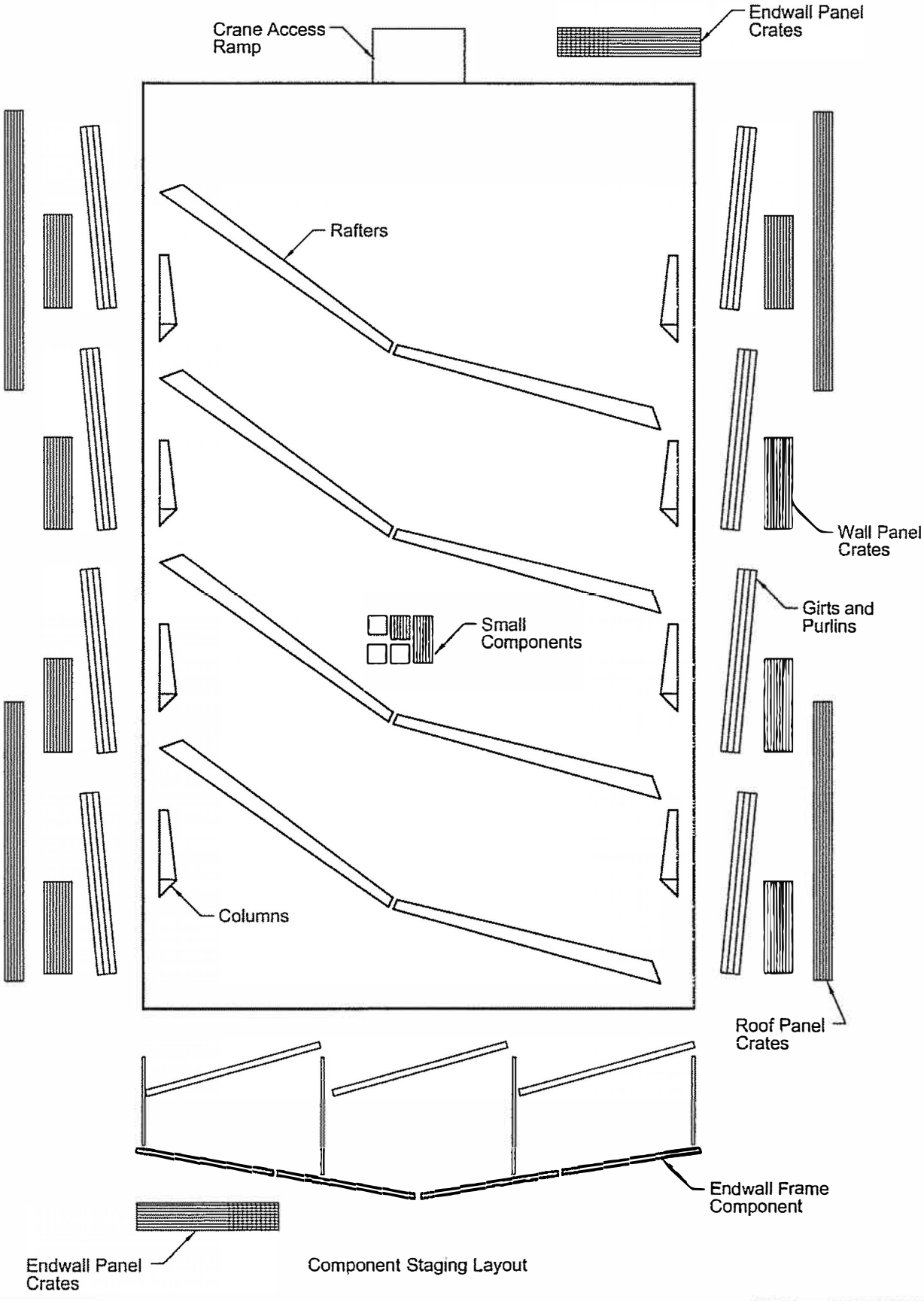

Component Staging Layout

7.0 STRUCTURAL FRAMING GENERAL INFORMATION

7.1 Typical Rigid Frame Variations

The primary framing members are the rigid frames. The building's end use will normally determine frame type. Refer to the erection drawings for your building's specific frame variations and erection requirements.

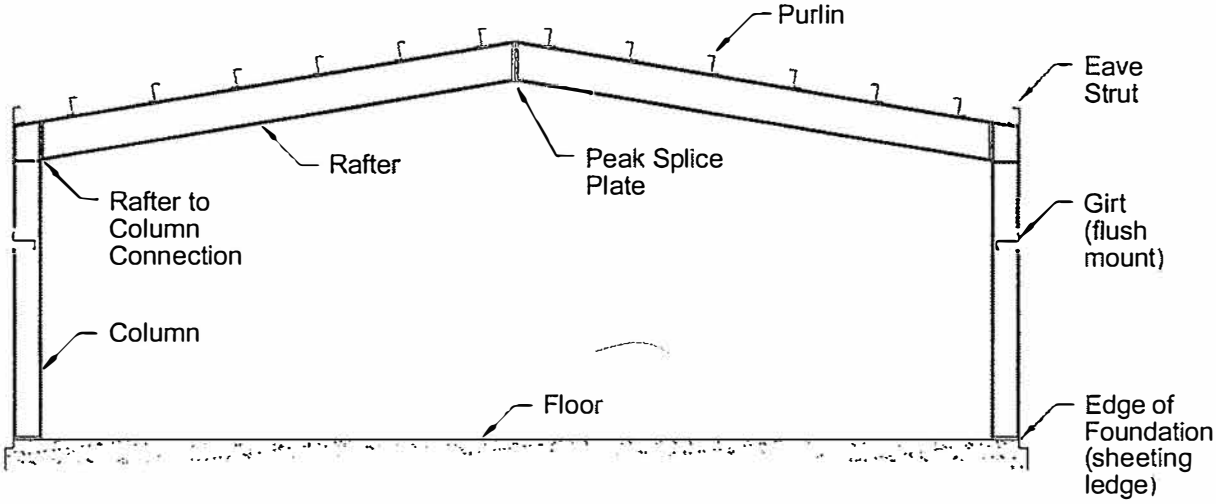

Stright Columns with - Flush Girts

- **Straight Columns with Flush Girts**

Straight column frames and flush girts provide minimum intrusion of the frames into the building's interior space.

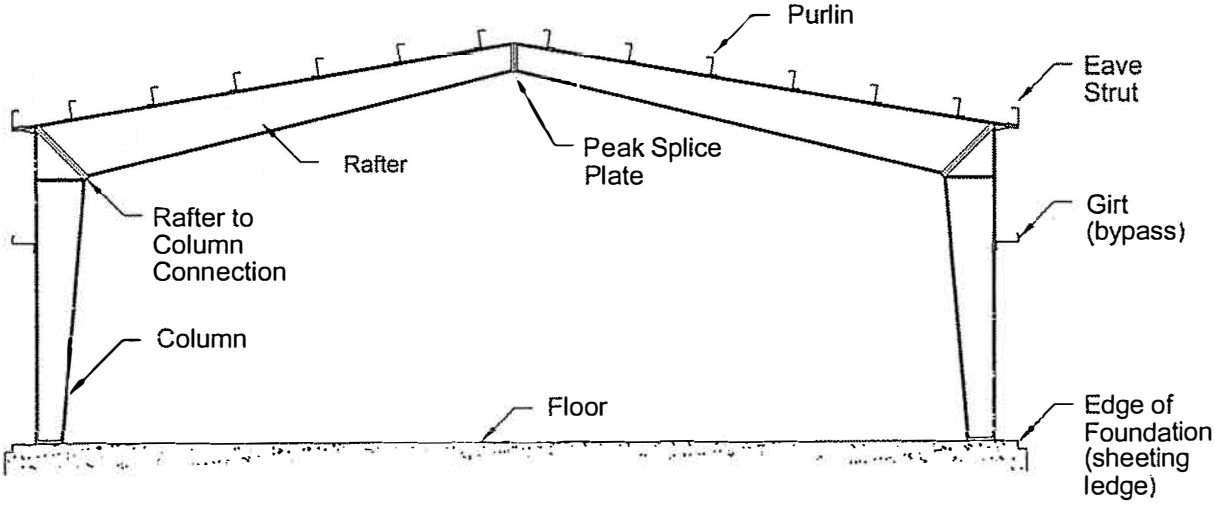

Tapered Columns with - Exterior Girts

- **Tapered Columns with Exterior Girts**

Tapered column frames and exterior (bypass) girts provide frame design efficiency (minimum weight and cost). On large buildings, the frames may have additional interior columns to provide frame design efficiency.

7.2 Rigid Frame Components

Before beginning the frame erection, familiarize yourself with the frame components and where they are oriented on the building.

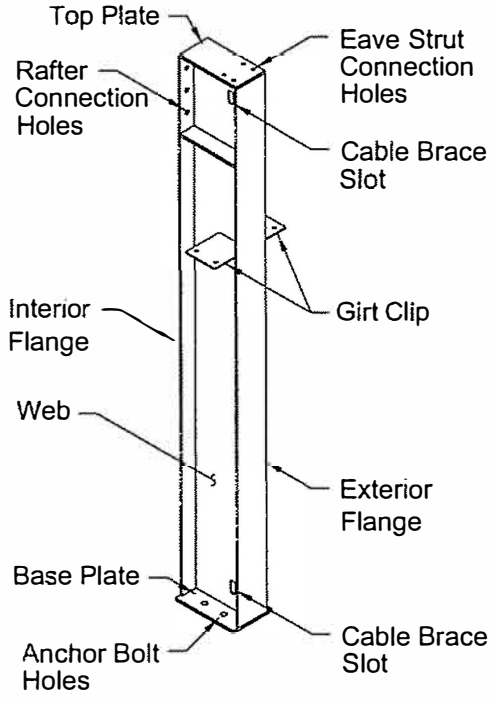

Straight Column
(with Flush Girt Clip)

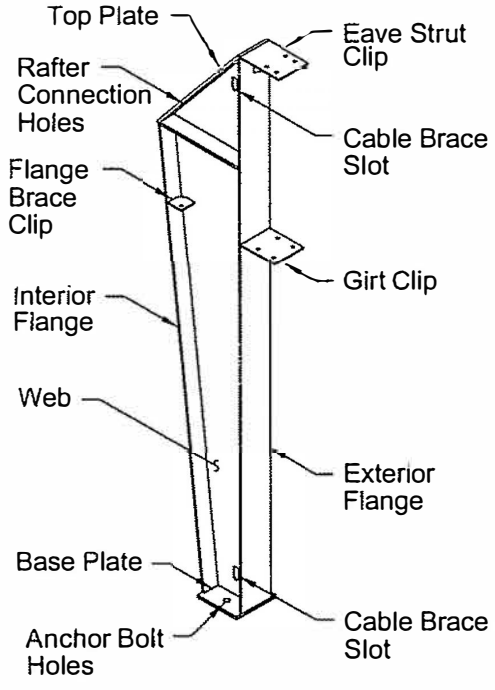

Tapered Column
(with Exterior Girt Clip)

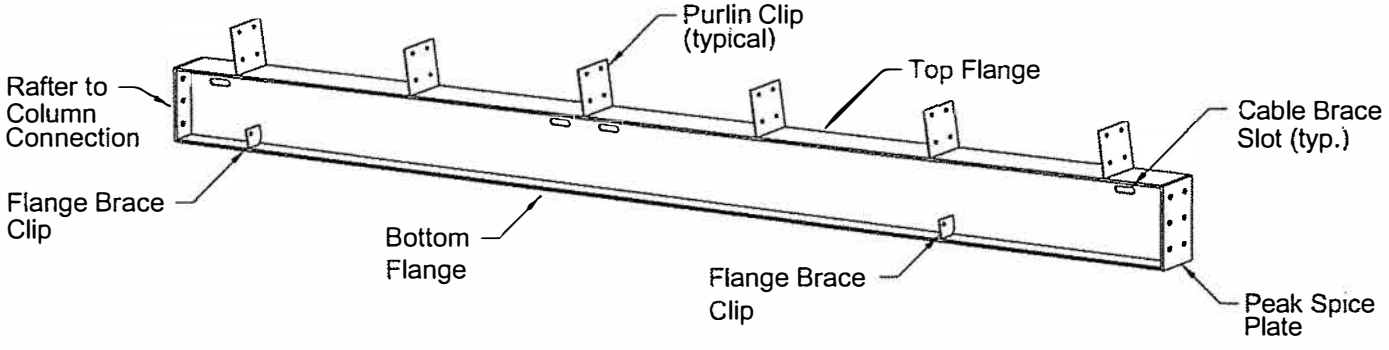

Rafter Section

Caution: double check part numbers to assure that similar appearing parts are not assembled in the wrong locations. After the frames are erected, it can be difficult and expensive to relocate frame components.

7.3 Frame Erection Sequence

Following is the recommended structural framing erection sequence for a typical Alliance rigid frame building.

Caution: Some building conditions may require an alternate erection sequence. Refer to the erection drawings at all times for your building's specific erection requirements.

- **Frame Alignment**

It is most important that the first erected bay is plumb, square and in true alignment so the remaining bays can be readily aligned, squared and plumbed to the preceding bay(s).

- **Braced Bay**

The braced bay's diagonal bracing makes it most suitable to be the first erected bay. On buildings without diagonal bracing (such as building using diaphragm action of the roof and wall panels for bracing), an intermediate bay must be temporarily braced during the framing and paneling erection.

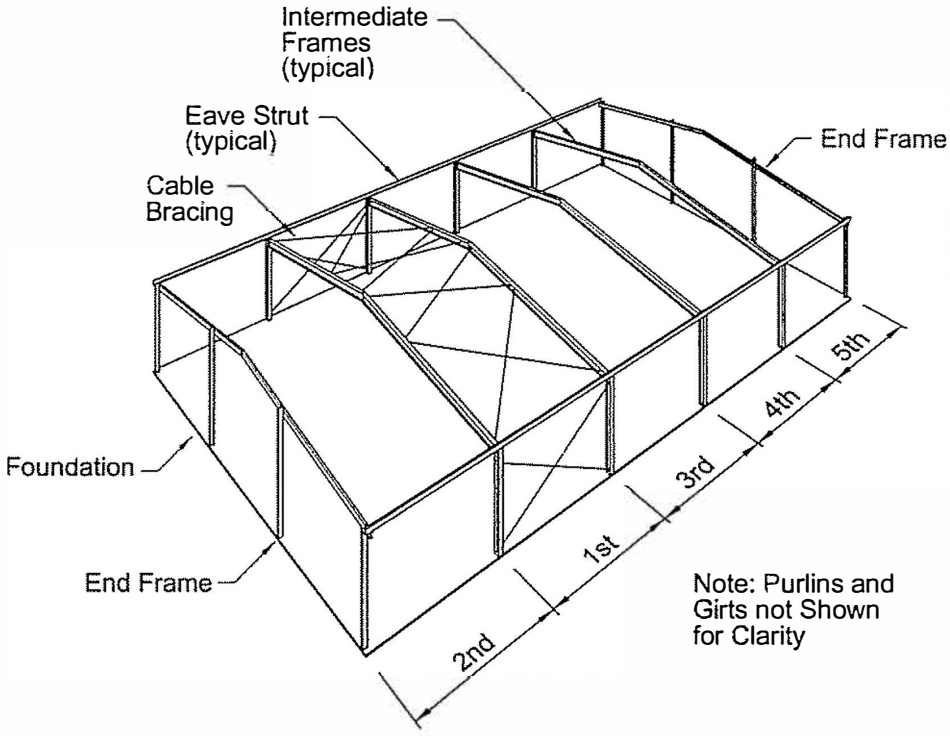

Bay Erection Sequence

Bay Erection Sequence

1st - Erect the braced bay
2nd - Erect the end bay next to the braced bay
3rd - Erect the intermediate bay next to the braced bay
4th - Erect the next intermediate bay(s)
5th - Erect the opposite end bay

8.0 RIGID FRAME ERECTION

8.1 Column Preparation

• Attach Flange Braces

Before erecting the columns, attach flange braces to the column clips with 1/2" standard bolts and nuts. Refer to erection drawings for flange brace locations.

• Finger Tighten

Tighten bolt and nut only finger tight at this time.

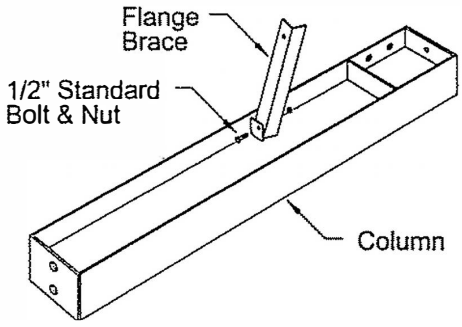

8.2 Setting the Columns

• Braced Bay Columns First

On one side of the foundation, set the braced bay columns onto their respective anchor bolts.

• Level Column Base

As necessary for level and stable bearing of the column base plates, chip away the foundation high spots and shim the low spots.

• Align Column Faces

Align the outside face of the column with the edge of the foundation.

• Plumb the Columns

Using a minimum 4' level or transit, plumb the columns in both directions.

• Attach to Anchor Bolts

Install anchor bolt nuts and tighten as necessary to secure and stabilize the columns in their plumb positions.

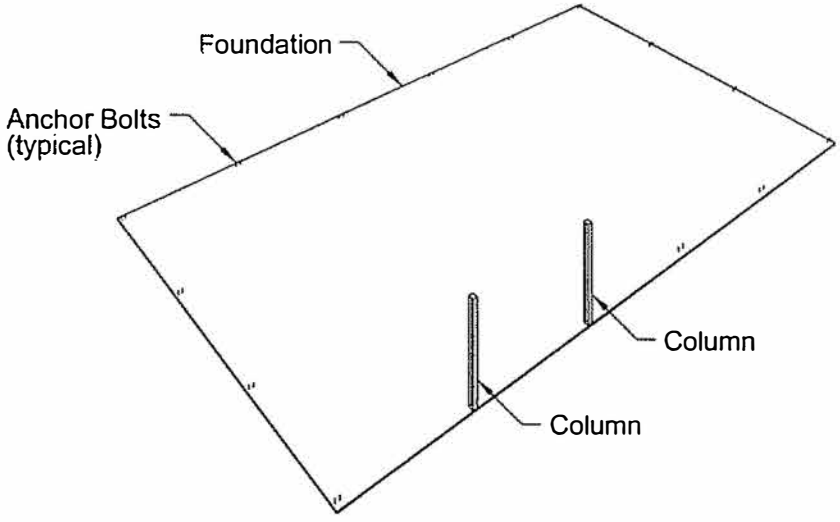

Setting Braced Bay Columns First

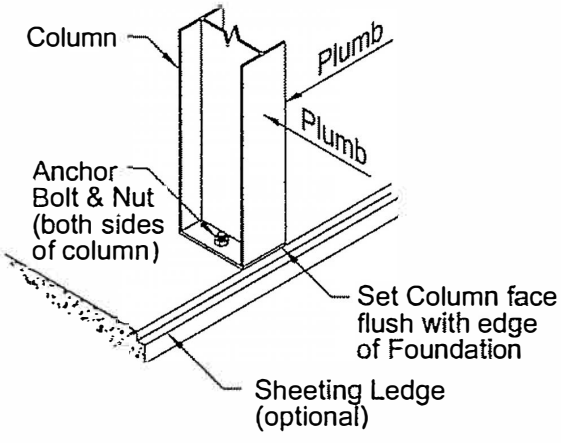

Column with Flush Girts

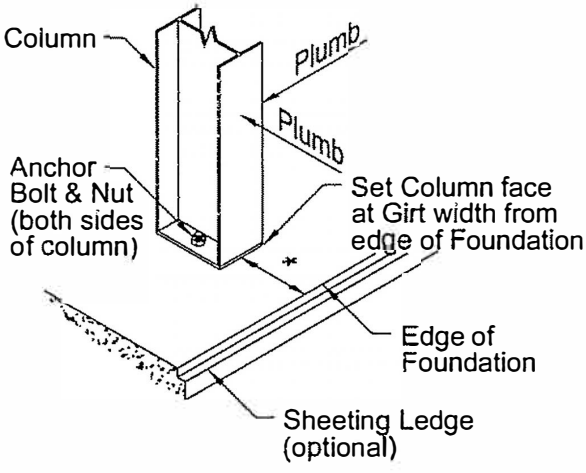

Column with Exterior Girts

8.3 Install Eave Strut and Girts

- **Tie Columns Together**

Tie the columns together by attaching the eave strut and girts.

- **Align Eave Struts & Girts**

Set the face of the eave strut to align with the girt faces and the edge of the foundation. Check the alignment with a string line and plumb bob extending from the face of the eave strut to the edge of the foundation.

- **Girt Attachment at Frame Columns**

Flush girts are attached with two 1/2" standard bolts and nuts. For exterior girts, attachment to the column is made with one pan head bolt which will remain in place after the adjacent lapping girts are installed.

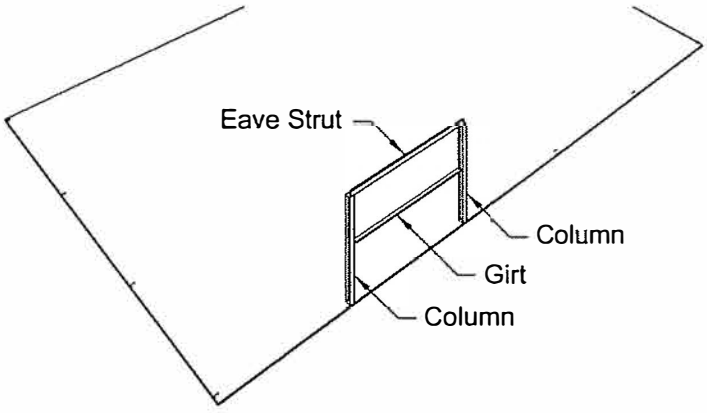

Install Braced Bay Eave Strut & Girts

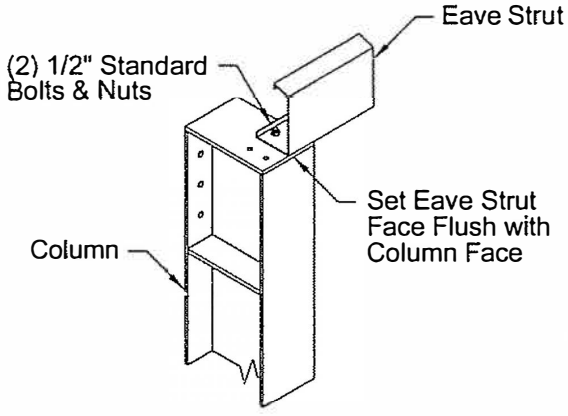

Column with Flush Girts

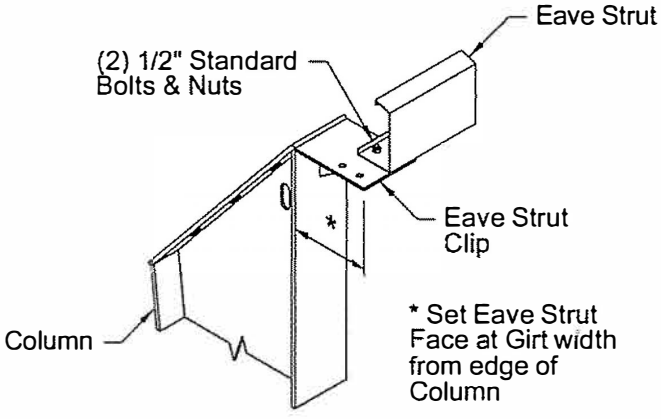

Column with Exterior Girts

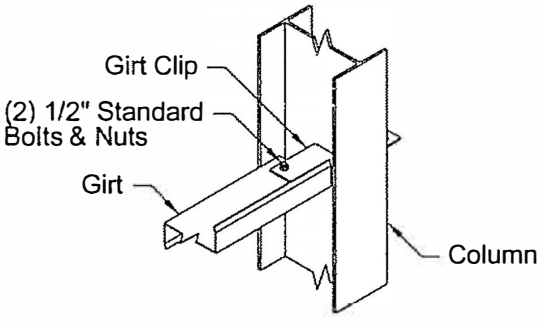

Column with Flush Girts

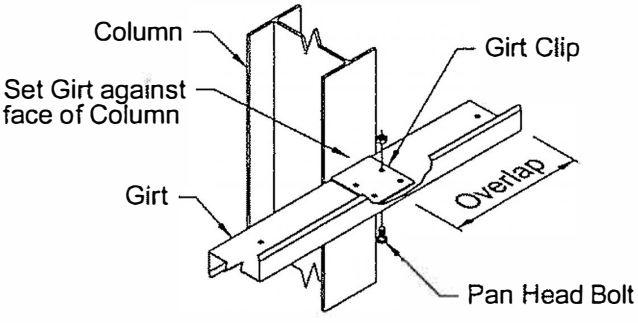

Column with Exterior Girts

8.4 Setting Columns on Opposite Side

- **Set the Columns**

Repeat Steps 1-3 to erect the braced bay columns on the opposite side of the foundation.

- **Check Alignment**

Check opposing column alignment by measuring the frame width (outside to outside column face).

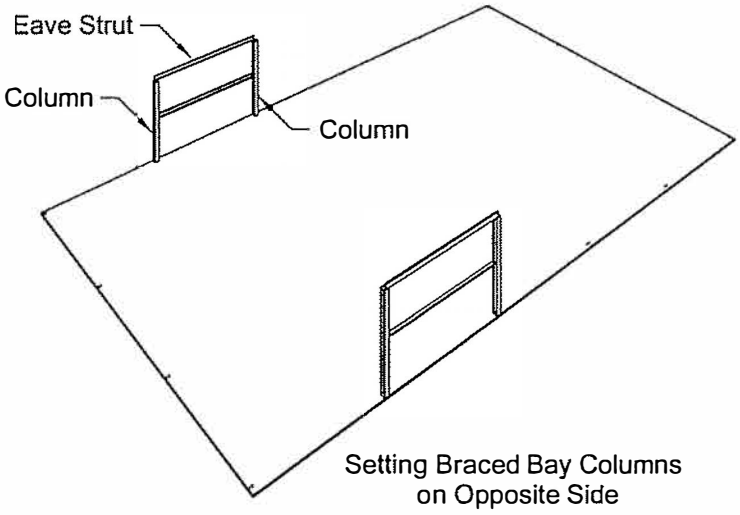

Setting Braced Bay Columns on Opposite Side

8.5 Assemble the Rafters

- **Level Assembly Area**

Assemble the rafters on a level area (such as the building's floor). Position the rafter assembly at a suitable location for hoisting the rafters onto the columns.

- **Use Blocking**

Place wood blocking under the rafter sections to provide access for the connection bolts and hoisting slings and to protect the assembly from scuffing. Make sure the blocking is high enough to allow for adequate tightening of the bottom bolts.

- **Attach Flange Braces**

Before erecting the rafters, attach the flange braces. Tighten the bolt and nut only finger tight at this time.

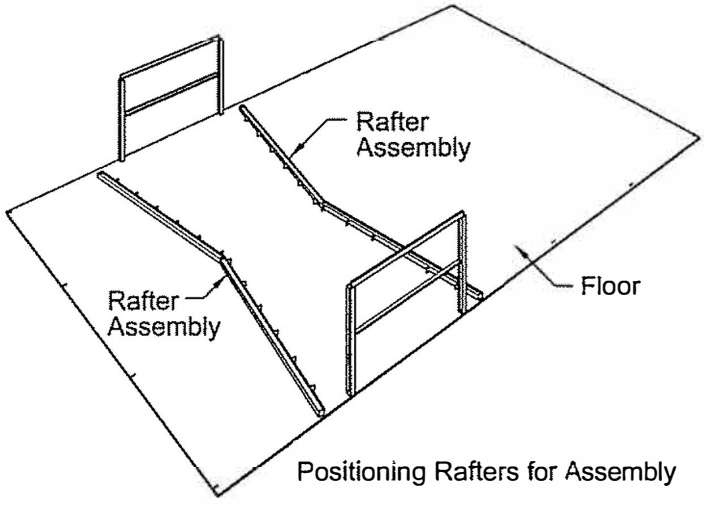

Positioning Rafters for Assembly

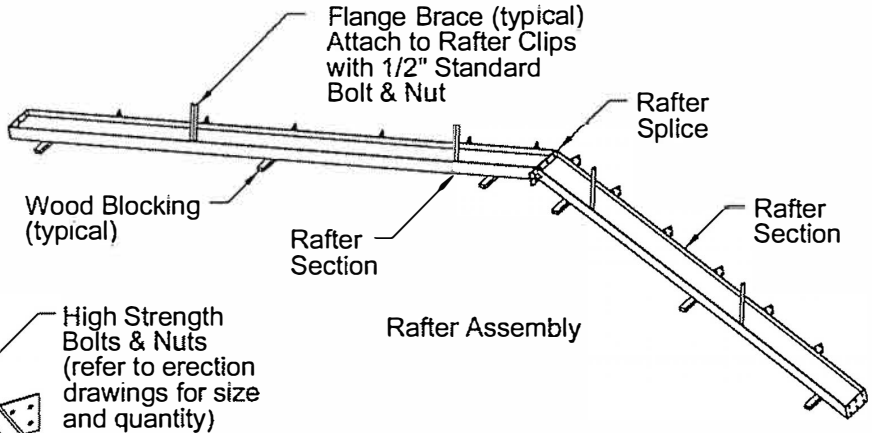

Rafter Assembly

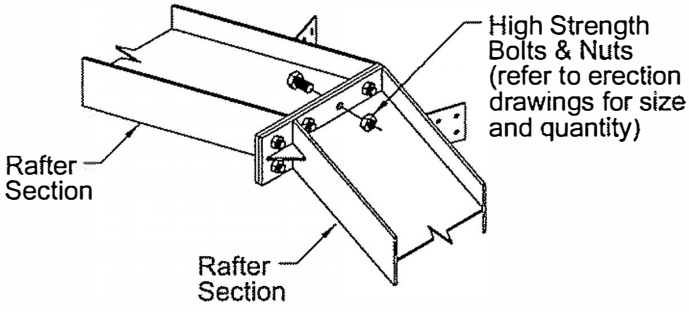

Rafter Peak Connection

8.6 Hoisting the Rafters

- **Rigging the Rafter**

Rig the rafter assembly for hoisting. Rigging, slinging and lifting methods vary with the size and weight of the rafter assembly. Be sure the type of hoisting equipment and rigging method is suitable to the size and weight of the assembly.

- **Use a Center Sling**

A center sling will stabilize the rafter in the upright position and will help prevent roll over and twisting of the rafter.

- **Prevent Slippage**

Position the choker slings at the purlin clips to prevent slippage. Use wood blocks to prevent sling damage to the rafter and the slings.

- **Test Lift**

After attaching the slings, test lift the rafter to check for slippage, twisting or roll-over. Reposition the slings as necessary.

The sling is correctly positioned when test lift indicates minimum frame distortion. Note the location of the sling connections for positioning on the remaining roof beam assemblies.

- **Attach Lines**

While the roof beam assembly is still accessible from the ground, connect tag lines and guy lines for guiding the roof beam into place and tying off the rigid frame after erection.

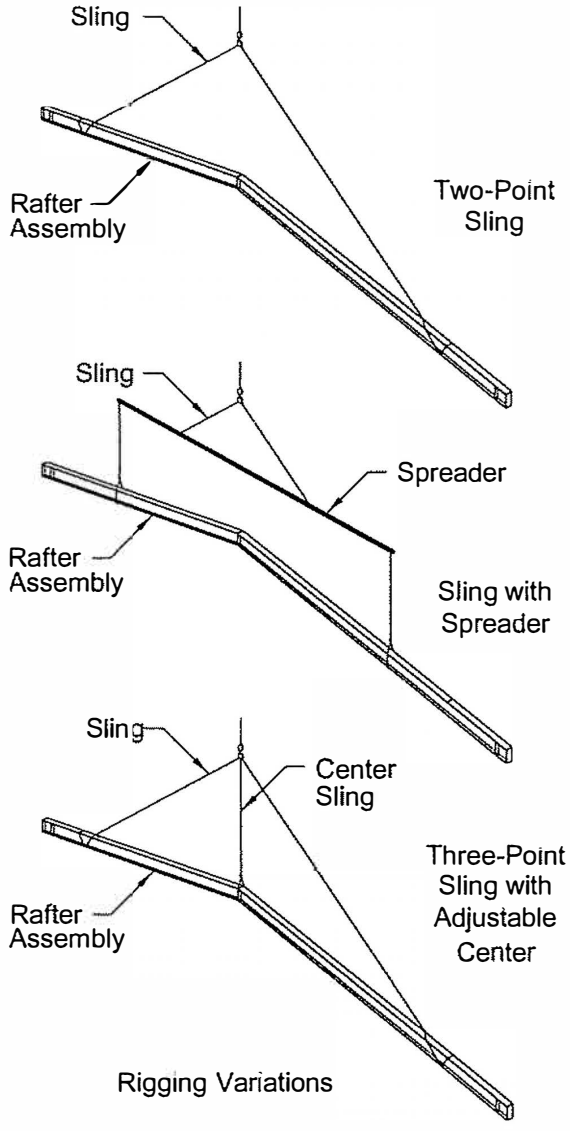

Rigging Variations

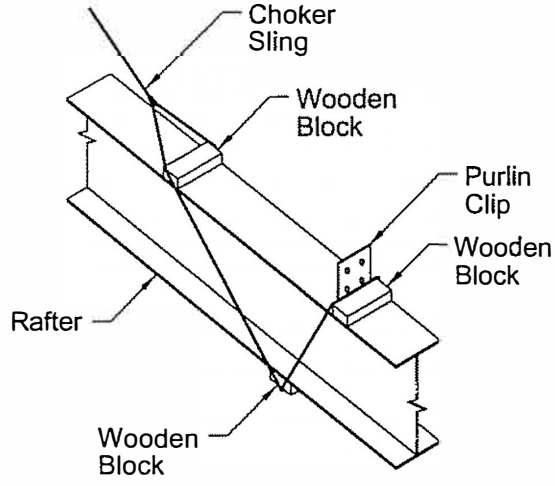

Choker Rigging

8.7 Setting the Rafters

- **Hoist & Set the Rafter**

Raise the rafter assembly and position for connection to the columns. Avoid impact damage when lifting and setting rafters.

- **Align Connection Holes**

Use spud wrench or drift pin to help align connection holes between rafter and columns.

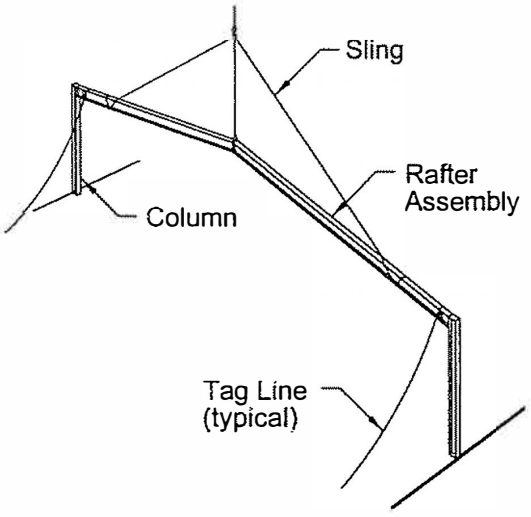

Setting the Rafter

8.8 Connecting the Rafters to the Columns

Align the rafter and column connection plates and secure the connection with high strength bolts and nuts.

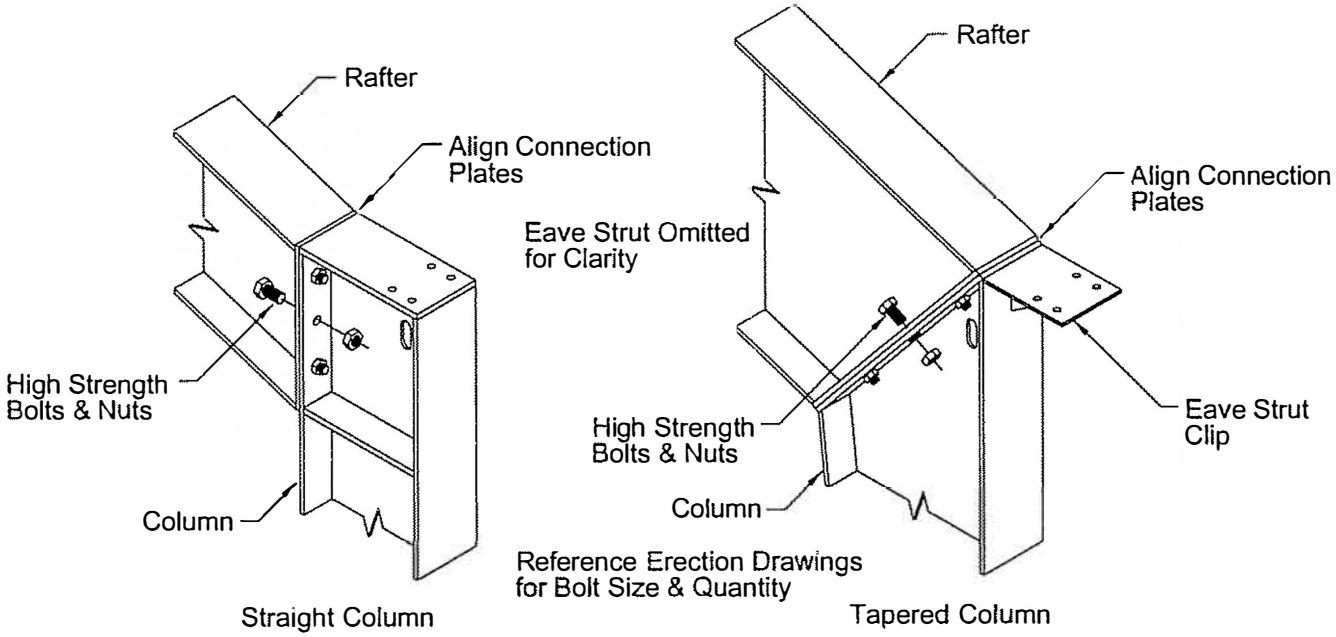

Straight Column Connection

Tapered Column Connection

8.9 Tie Off Frames

- **Install Temporary Bracing**

Temporarily brace the frames with steel cables secured to the top of each frame and tied off to anchor bolts of adjacent bays.

- **Leave Temporary Bracing In Place**

This temporary bracing should be left in place until the first bay with the permanent bracing is completed and all connections tightened.

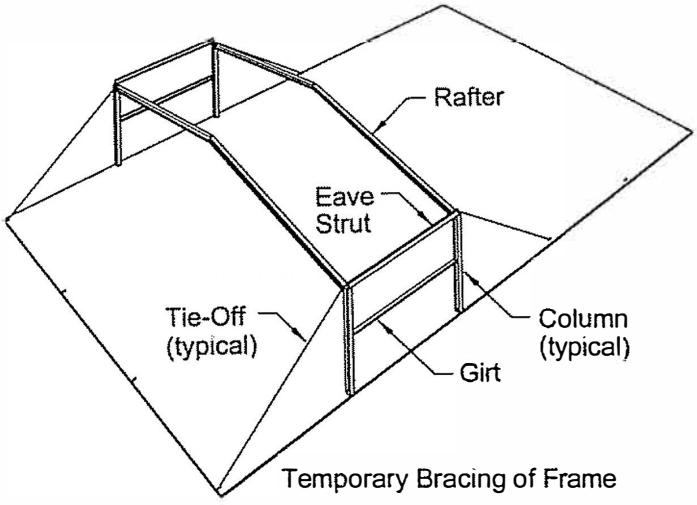

Temporary Bracing of Frame

8.10 Install Purlins

- **Orient the Purlins**

Before hoisting the purlins to the roof, orient the purlins so the top flanges are facing towards the ridge.

- **Check Lap Dimensions**

Refer to the erection drawings for the purlin lap overhang dimension.

- **Check Purlin Clips**

Make sure the purlin clips are a true 90 degrees to the top rafter flange. If the clips have been bent out of position in shipping or handling, carefully return the clip to a 90 degree position on the rafter flange.

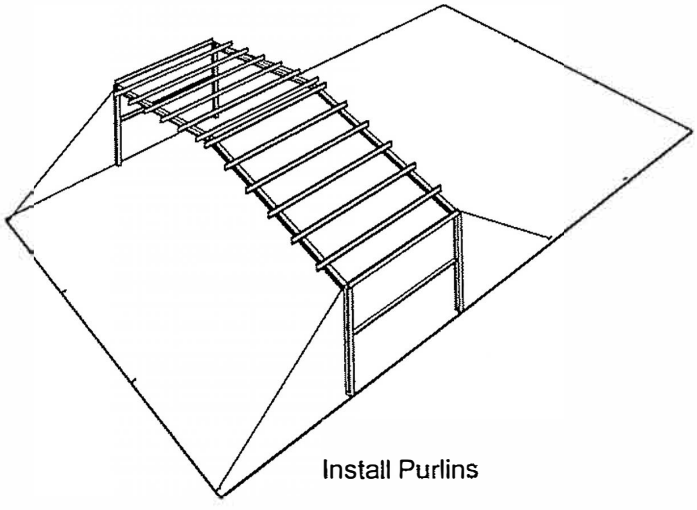

Install Purlins

- **Install Purlin Bolts**

The initial purlin connection to the purlin clips is made with (1) 1/2" diameter pan head bolt per clip. This bolt will remain in place after the adjacent overlapping purlin is installed.

When the adjacent overlapping purlin is installed, connect both purlins to the clip with (2) 1/2" diameter bolts per clip. Refer to the erection drawings for bolt length and type. Install the bolts in a diagonal pattern.

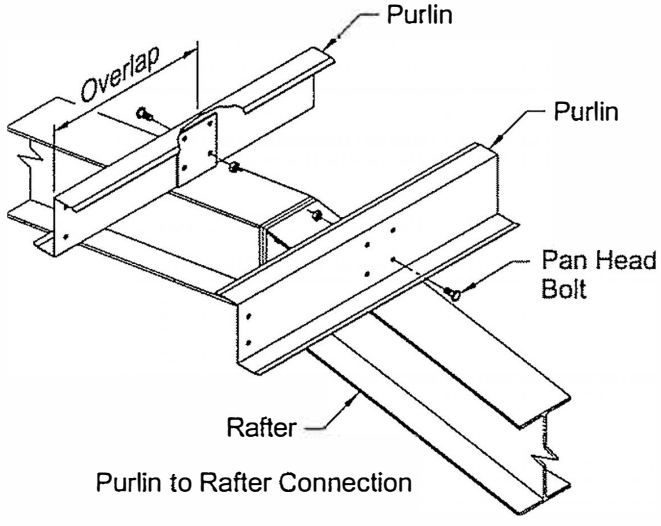

Purlin to Rafter Connection

8.11 Install Diagonal Bracing

- **Bracing Location**

Install the diagonal bracing in the braced bay wall and roof planes. Refer to the erection drawings for diagonal bracing locations and sizes.

- **Bracing Type**

Diagonal bracing is normally steel cables pre-assembled to threaded eye bolts at each end but may be steel rods with threaded ends (check erection drawings). The webs of columns and rafters have slotted holes for the attachment of the cable brace eye bolts.

- **Girt Slots**

On frames with flush girts, the web of the girts will require field cut slots for the bracing to pass through.

- **Bracing Connections**

Secure bracing ends with hill side washer, flat washer and nut. Only finger tighten at this time.

Eave Strut, Purlins, & Girts Omitted for Clarity

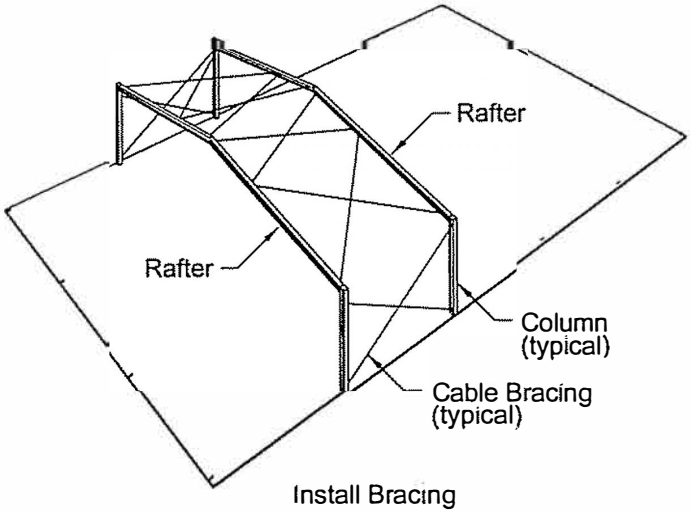

Install Bracing

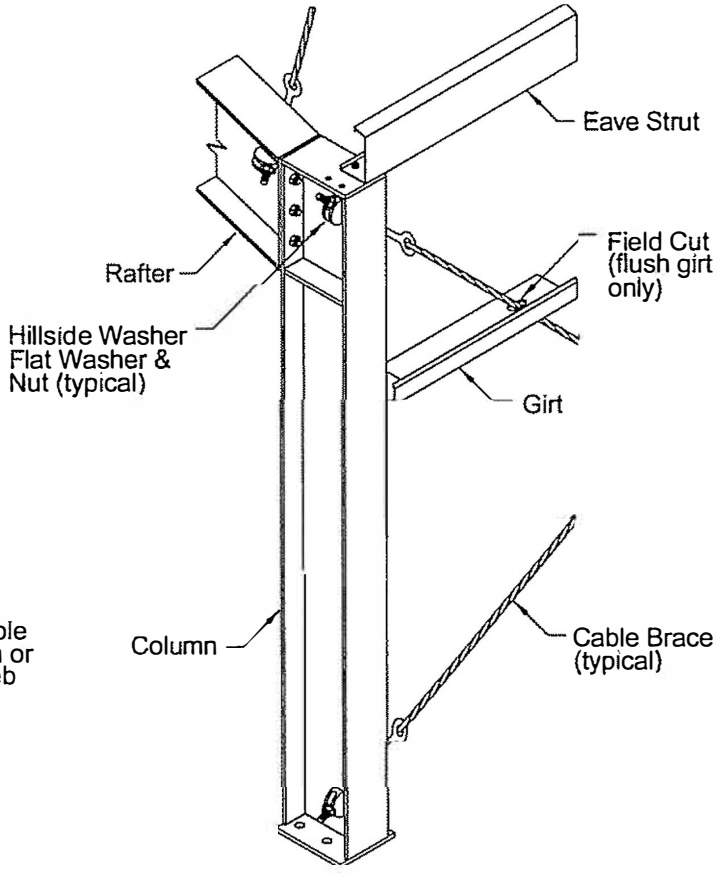

Bracing Connections

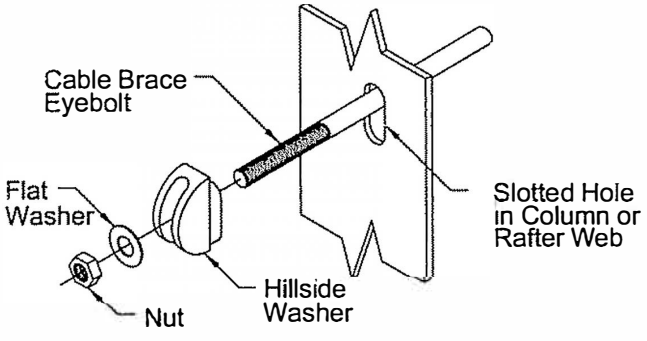

Connection Assembly

8.12 Framing Alignment

• Align Braced Bay First

Alignment of the building's framing system begins with the first bay (braced bay) and continues through completion. Perfect alignment of the first bay is most important to assure correct alignment of the succeeding bays.

• Align the Columns

Use a level or transit to plumb the columns. Adjust the columns by loosening or tightening the diagonal bracing. As one brace is tightened, the opposite one must be loosened.

• Check Squareness

Check the bay squareness by measuring from the under side of the rafter at each column to the same point on the opposite columns diagonally across. The bay is square when the measurements are the same between opposite corners

• Align the Rafters

Use a plumb line or transit to check the alignment of rafters. Adjust the rafters by loosening or tightening the diagonal bracing. When the rafter is properly aligned, the plumb bob will hang at the center line between columns.

• Tighten Bracing

Tighten bracing to slightly snug when columns and rafters are plumb and square. Burr threads on eye bolts or brace rod ends after final tightening.

Eave Strut, Purlins, & Girts Omitted for Clarity

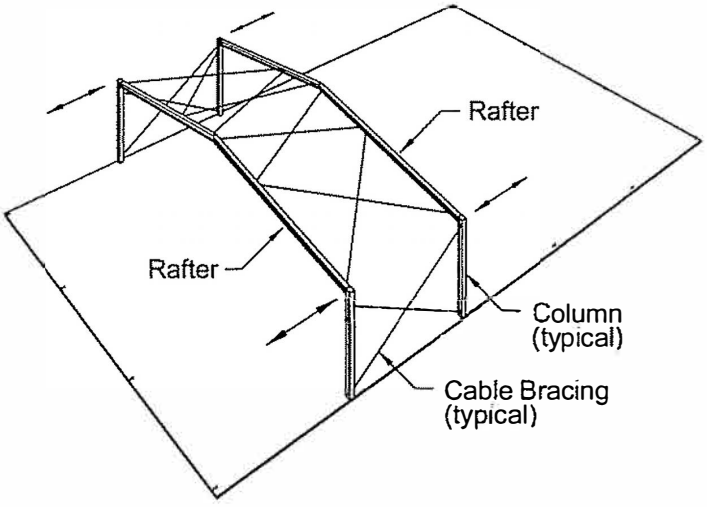

Plumbing the Column

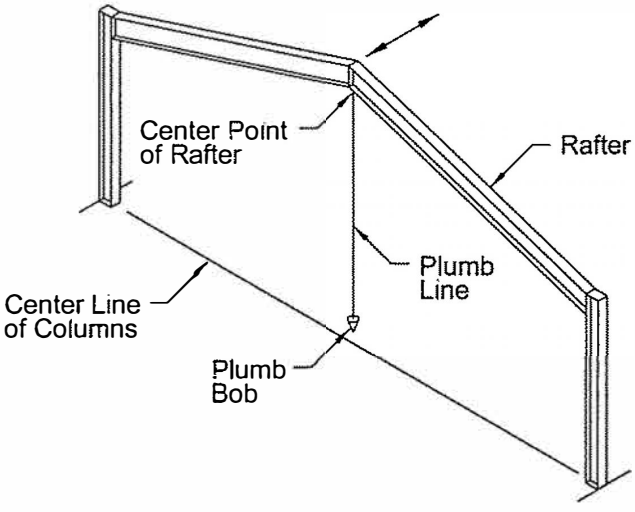

Aligning the Rafter

8.13 Assemble the End Frame

- **End Frame Variations**

Some buildings require alternate end frame types than what is shown in these instructions. Always refer to the erection drawings your building's specific assembly requirements.

- **Level Assembly Area**

Assemble the end frame on a level surface, such as the building's floor. Position the assembly at a suitable location for hoisting into position onto the column anchor bolts.

- **Use Blocking**

Place wood blocking under the rafter sections to provide access for the connection bolts and hoisting slings and to protect the assembly from scuffing. Make sure the blocking is high enough to allow for adequate tightening of the bottom bolts.

- **Check Assembly Alignment**

Before tightening the assembly's connection bolts, check that the assembly parts are correctly positioned and aligned.

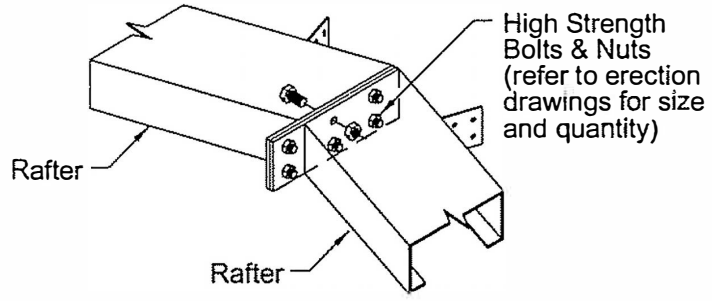

Rafter Peak Connection

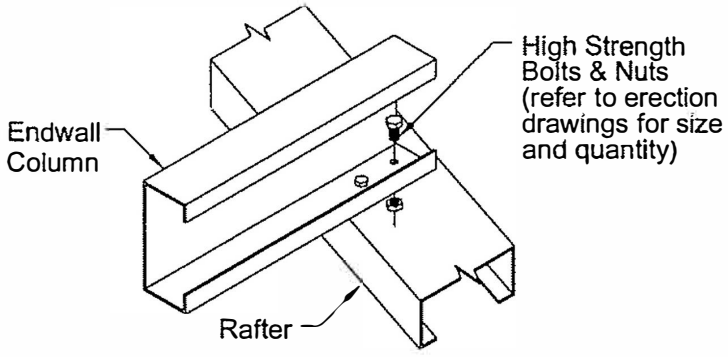

Rafter to Column Connection

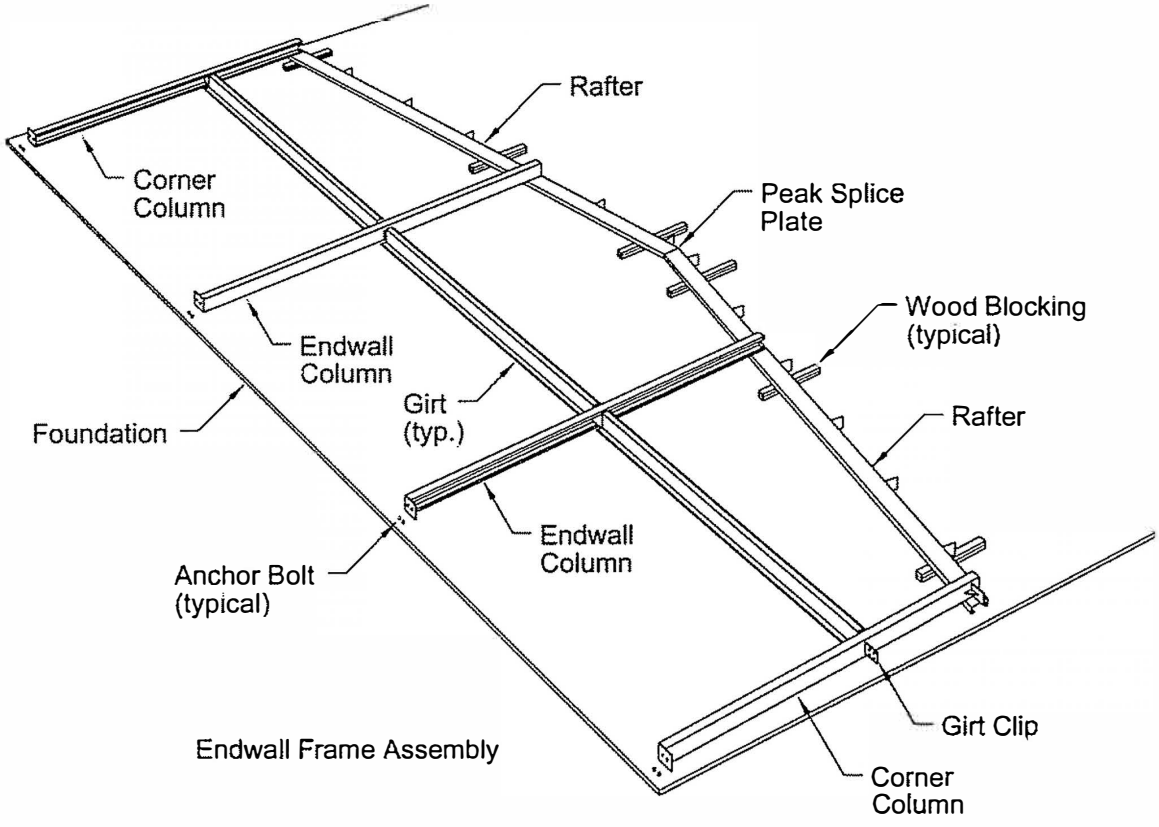

Endwall Frame Assembly

8.14 Setting the End Frame

- **Rig the End Frame**

Rig the end frame assembly for hoisting (Reference Step 6 — Hoisting the Rafter). Rigging, slinging and lifting methods vary with the size and weight of the end frame assembly. Be sure the type of hoisting equipment and rigging method is suitable to the size and weight of the assembly.

- **Hoist and Set the End Frame**

Raise the end frame assembly and position for setting the endwall columns onto their respective anchor bolts. Avoid impact and bending damage when lifting and setting the assembly.

- **Level Column Bases**

As necessary for level and stable bearing of the column base plate, chip away the foundation high spots and shim the low spots.

- **Align the Columns**

Align the columns with the edge of the foundation. Using a 4' level or transit, plumb the columns in both directions.

- **Attach to Anchor Bolts**

With the hoisting sling still connected, install the anchor bolt nuts and tighten as necessary to stabilize the columns in their plumb positions.

- **Temporary Bracing**

Temporarily brace the end frame until the end bay eave struts and purlins are installed and their connections are tightened.

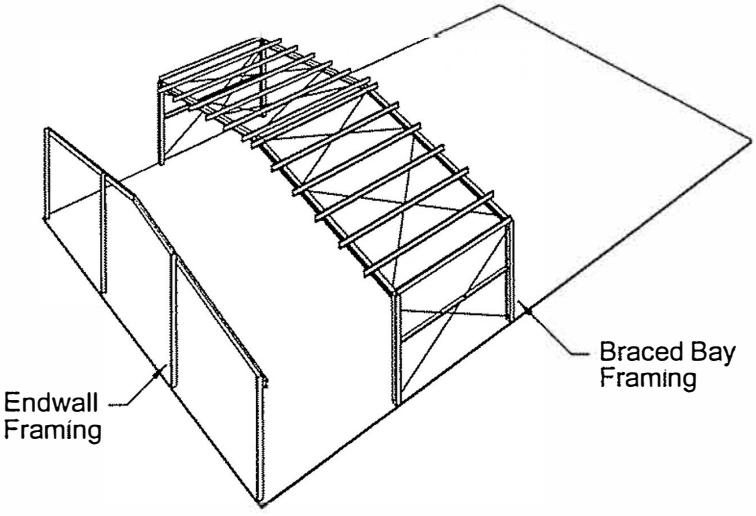

Setting the Endwall Frame

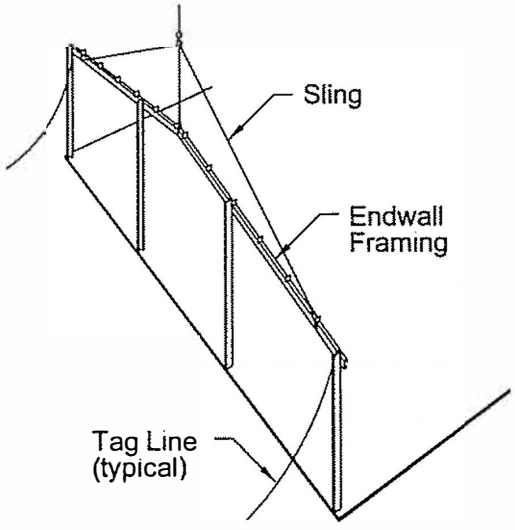

Hoisting the Endwall Frame

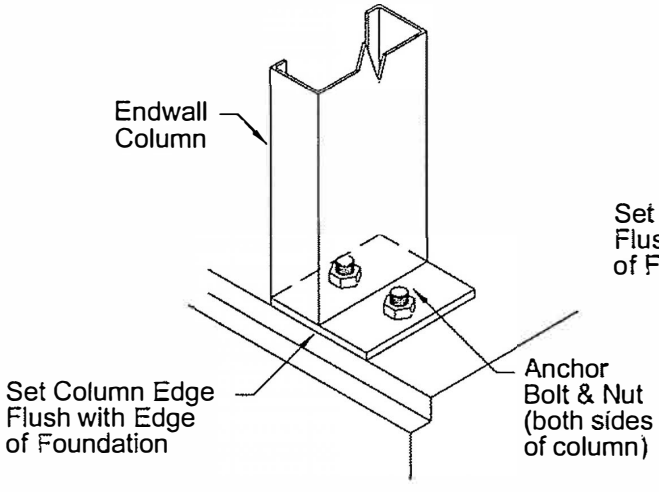

Endwall Interior Column

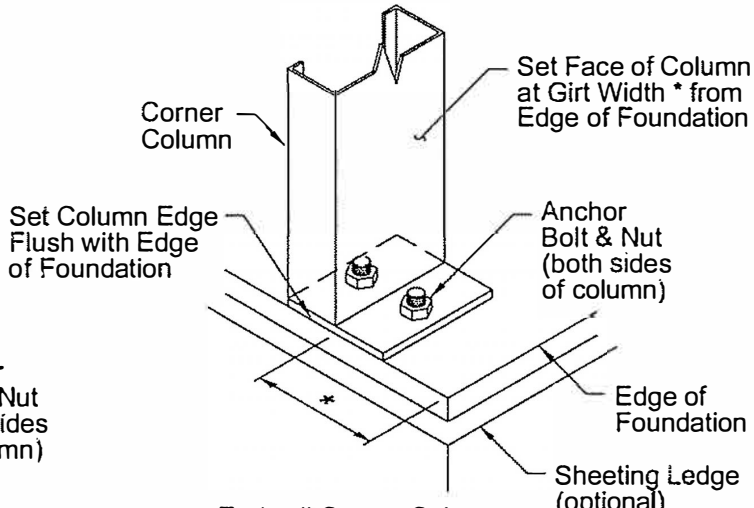

Endwall Corner Column

8.15 Complete the End Bay

- **Install Framing Members**

Install the eave struts, purlins and girts between the intermediate frame and the end frame.

- **Eave Strut Alignment**

Set the face of the eave struts to align with the face of the girts.

- **Temporary Diagonal Bracing**

If the building is utilizing the wall panel diaphragm strength for bracing the endwall, install temporary diagonal bracing to hold the end frame assembly square until the wall panels are installed.

- **Bracing Location**

If the end frame is to have permanent diagonal bracing, refer to the erection drawings for the bracing locations and sizes.

- **Bracing Type**

The diagonal bracing will most likely be steel cables but may be steel rods. Refer to 8.11 for bracing installation details.

- **End Frame Alignment**

Plumb and square the end frame before tightening the eave strut and purlin connections.

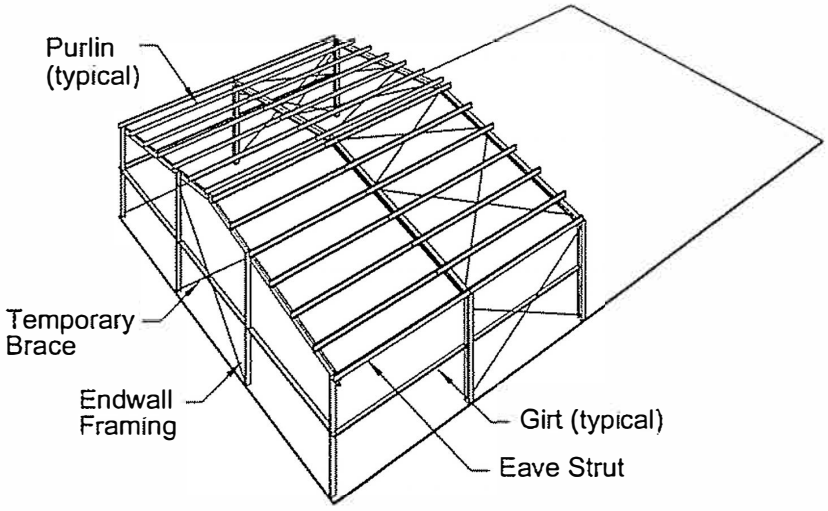

Erecting the Endwall Bay

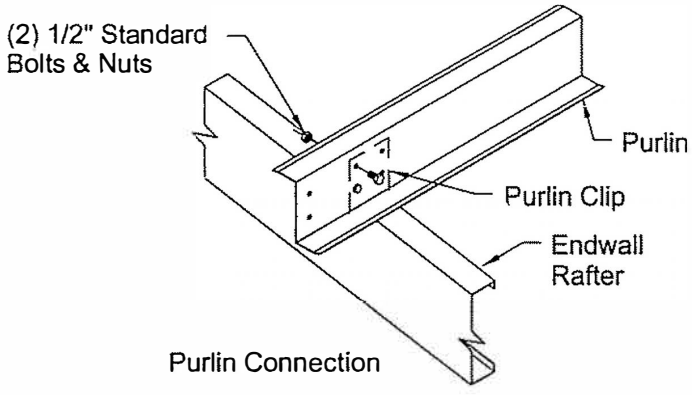

Purlin Connection

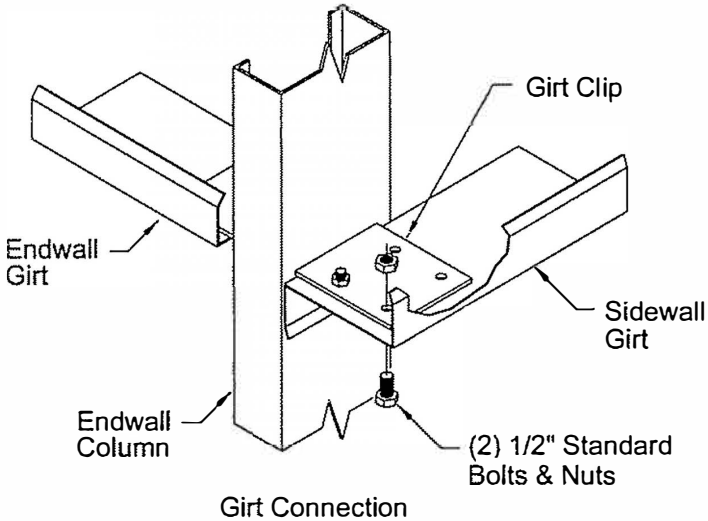

Girt Connection

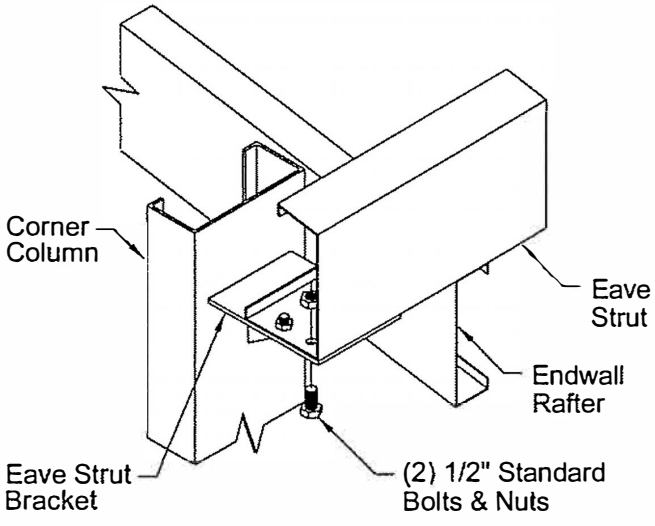

Eave Strut Connection

8.16 Erect the Remaining Bays

- **Erect Each Bay**

After the braced bay and end bay have been erected and aligned, proceed with the erection of the remaining bays following the same steps described for the braced bay.

- **Align Each Bay**

Plumb, square and align each bay before proceeding to erect the next bay.

- **Purlin & Girt Laps**

Lap the purlins and exterior girts between the bays as the succeeding bays are being erected.

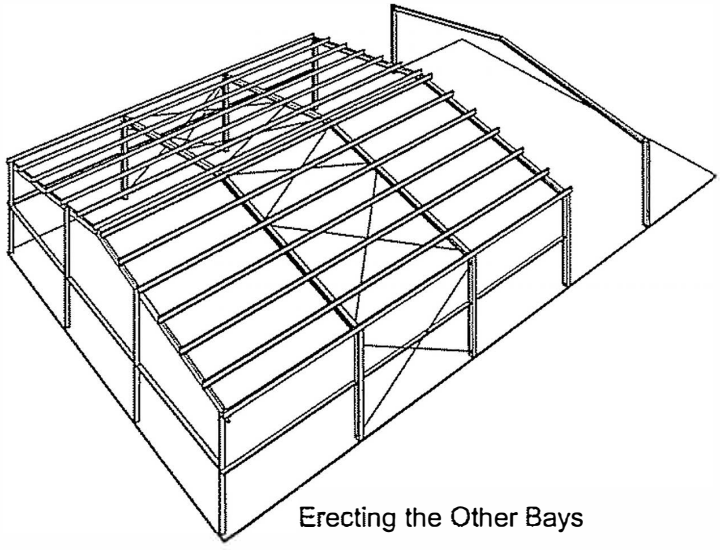

Erecting the Other Bays

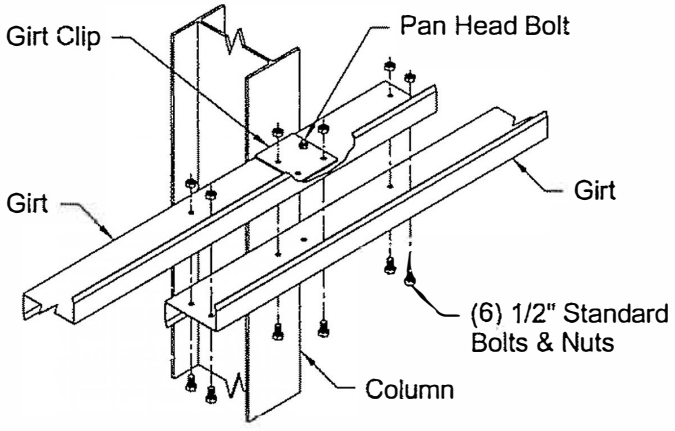

Girt Lap
(Exterior Girt Only)

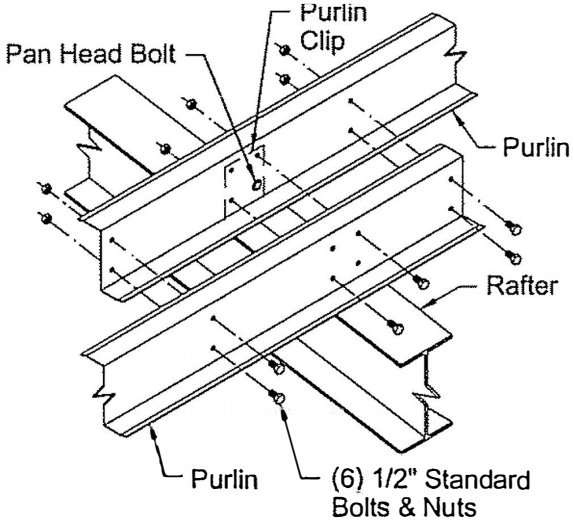

Purlin Lap

- **Connect Flange Braces**

Attach the rafter and column flange braces to the respective purlins and girts.

- **Tighten All Connections**

After the bay is erected and aligned, tighten all purlin, girt and flange brace connections.

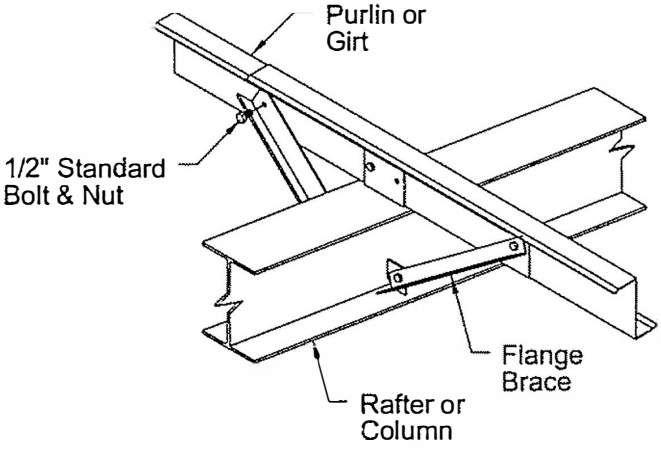

Flange Brace Connections

9.0 WALL AND ROOF PANEL GENERAL INFORMATION

9.1 Panel Description

"R" Panels (wall) and "PBR" Panels (roof) are the standard coverings for Alliance buildings.

The panels are available in various thicknesses, finishes and color options and are factory cut to the lengths required for specific building conditions.

Always refer to the project's erection drawings to assure the correct placement of the panels.

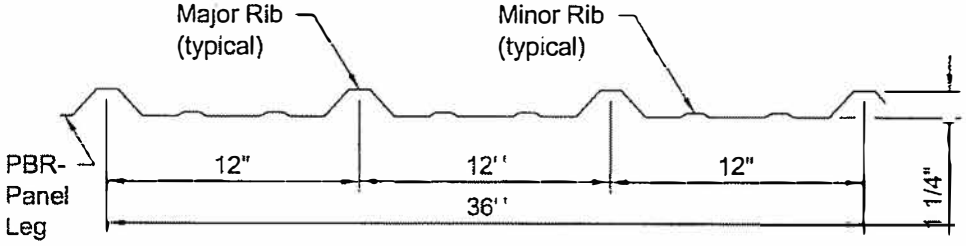

"R" Panel Cross Section

9.2 Panel Erection Planning

• Lapped Installation

The panels are installed by lapping the panel sides.

Lapped installation requires that the panels be installed in progression form one end to the opposite end of the wall or roof.

• Sheeting Direction

"R" panels are non-handed, which allows them to be installed in either direction. "PBR" panels are handed in that the purlin bearing leg will always be the leading edge.

The primary considerations in determining the direction of installation is to have the panel laps facing away from the prevailing wind or prevailing viewing direction.

Jobsite access or construction constraints may also dictate the direction of panel installation.

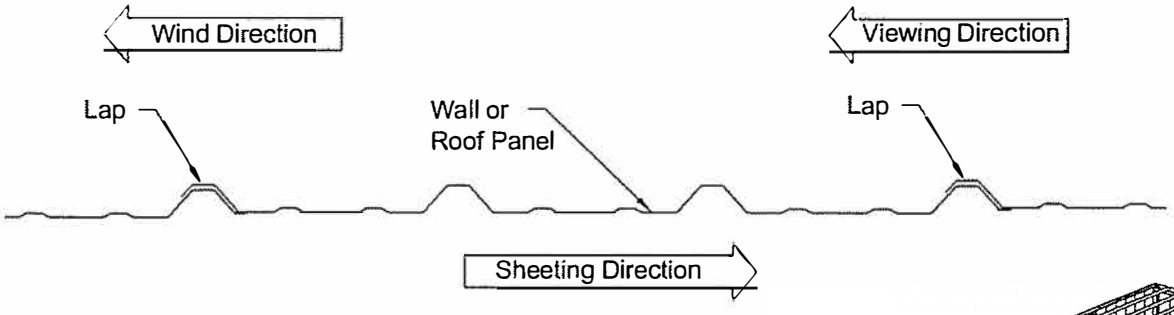

• Erect Walls First

To simplify the wall and perimeter flashing installation, install the wall panels before starting the roof panel installation.

• Erect in Same Direction

To maintain the alignment of the panels and insulation across the building, install the sidewall panels and the roof panels in the same direction on both sides of the building.

• Diaphragm Bracing

On many buildings, the wall and roof panels provide diaphragm bracing to help the building resist wind pressures. Do not remove any temporary frame bracing until the wall and roof panels are completely installed.

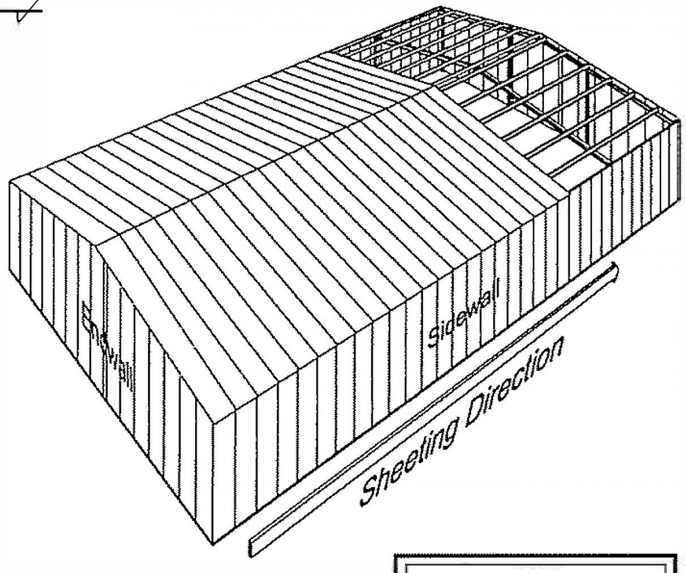

Sheeting Direction

10.0 WALL PANEL INSTALLATION

10.1 Preparing the Structure

• Check the Framing

Before starting the panel erection, confirm that the framing is completely assembled, all connections are tightened and all bracing is in place and correctly adjusted.

• Check Vertical Alignment

On each wall, check that the faces of the base angle, girts and eave strut or rake angle are all in alignment and the wall plane is plumb.

• Horizontal Alignment

Check that the girts and eave struts are level and along a straight line. Check that the rake angles are along a straight line.

Blocking may be required to remove sag and level the girts and eave struts. This can be done with scrap lumber cut to proper length and wedged between the wall structurals. As each bay is sheeted, the spacers can be moved to the next bay before proceeding with the sheeting.

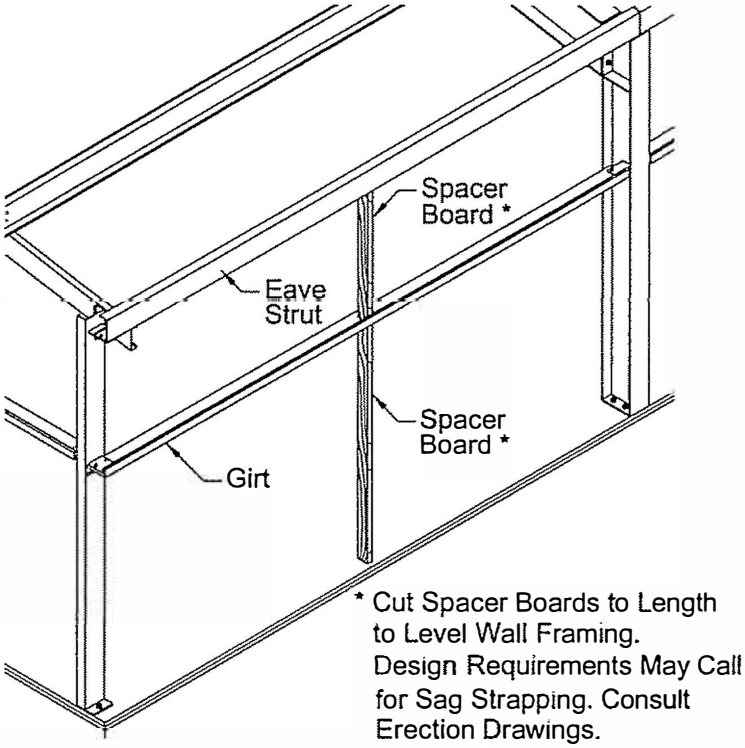

Blocking the Girts & Eave Strut

10.2 Marking Panel Layout

Determine the sheeting direction for each wall.

At the wall's starting corner, mark the foundation at 3' intervals along the full length of the wall.

Be sure that the end of the measuring tape is at the actual wall line of the adjacent wall. This should be the face of the sheeting ledge.

The marks must be positioned to be visible during installation of the panels.

• Check the foundation

Confirm that the sheeting ledge or edge of foundation is straight, level and clear of concrete projections or other obstructions.

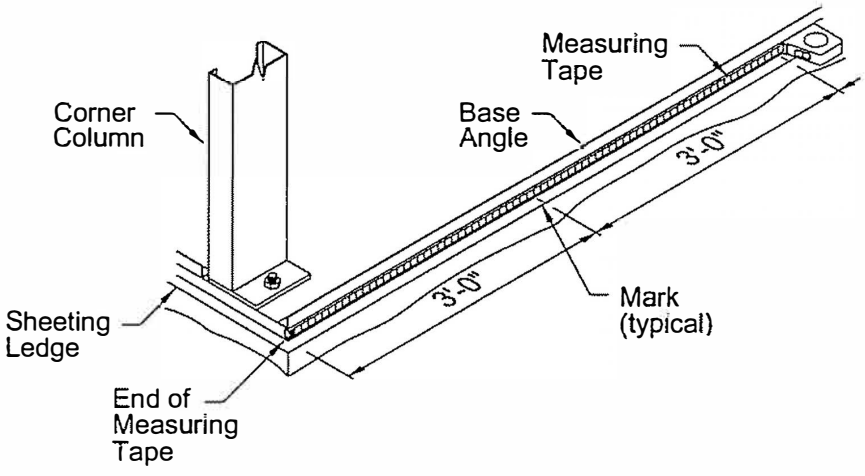

Marking Panel Layout

10.3 Pre-Drilling Panels

- **Importance**

When using self-drilling screws, pre-drilling the panels for the structural fasteners is not necessary but can help assure uniform alignment of the fasteners.

Pre-drilling the panels for sidelap fasteners helps maintain proper sidelap fit and prevents "cocked" fasteners.

Care must be taken to assure accurate layout and drilling of the holes.

- **Preparing the Template**

Make a template panel for each wall to ensure correct lap direction and location of drill holes at base, girts and laps.

First, hold your template panel against the wall framing. Then mark girt and base locations on the panel.

Layout the hole pattern on the template and drill the holes with a 3/16" diameter bit.

- **Stack Drilling Panels**

Separate panels for each wall by length and location into stacks of no more than ten panels. Place the template on the stack and align it with the top panel of the stack.

Mark the top panel through the holes in the template, then remove the template.

Secure stack with clamps and blocks so that all panels are laying flat, properly nested at corrugations and aligned at the ends and sides.

Then drill holes through stacks using template marks as bit guide.

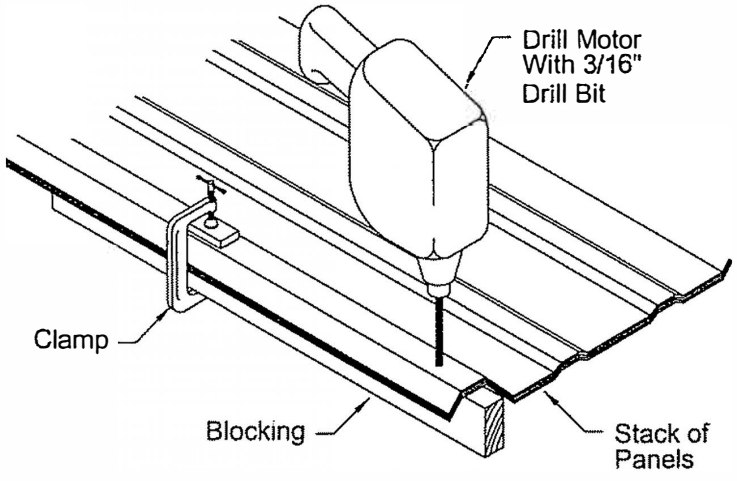

Pre-Drilling Panels

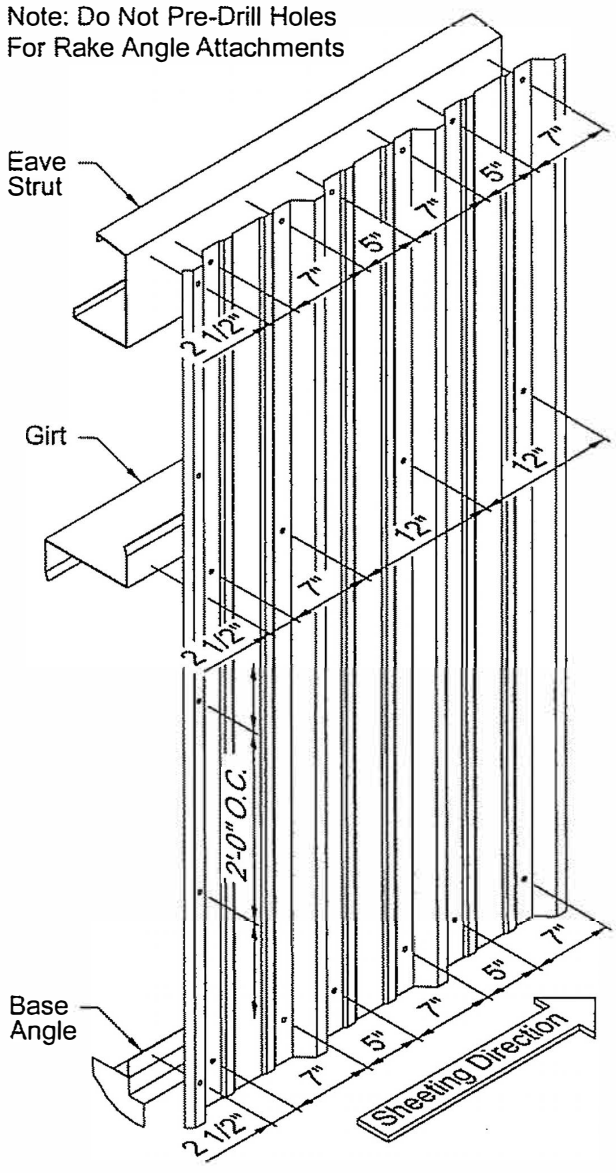

Wall Panel Hole Template

10.4 Starting the Insulation

- **Apply Retaining Tape**

Apply the double faced insulation retaining tape along the face of the base angle and eave strut.

- **Cut Insulation to Length**

From the starter (4') roll, cut the insulation to a length 12" longer than the wall panel.

- **Align Insulation**

Position the insulation with one edge extending 6" beyond the corner. Position bottom edge of insulation 6" below the sheeting ledge.

- **Tighten and Secure Insulation**

Press bottom of insulation against the retaining tape. Press firmly to assure complete adhesion. Pull up on the top of the insulation until the facing is taut and adjust to remove wrinkles. Press the top of insulation against the retaining tape.

- **Wrap Bottom of Insulation**

To prevent wicking at the bottom of the walls, the insulation facing is wrapped over the bottom end of the insulation.

Cut back the fiberglass just above the sheeting ledge. Wrap the extended facing up over the end of the fiberglass and secure with insulation tape.

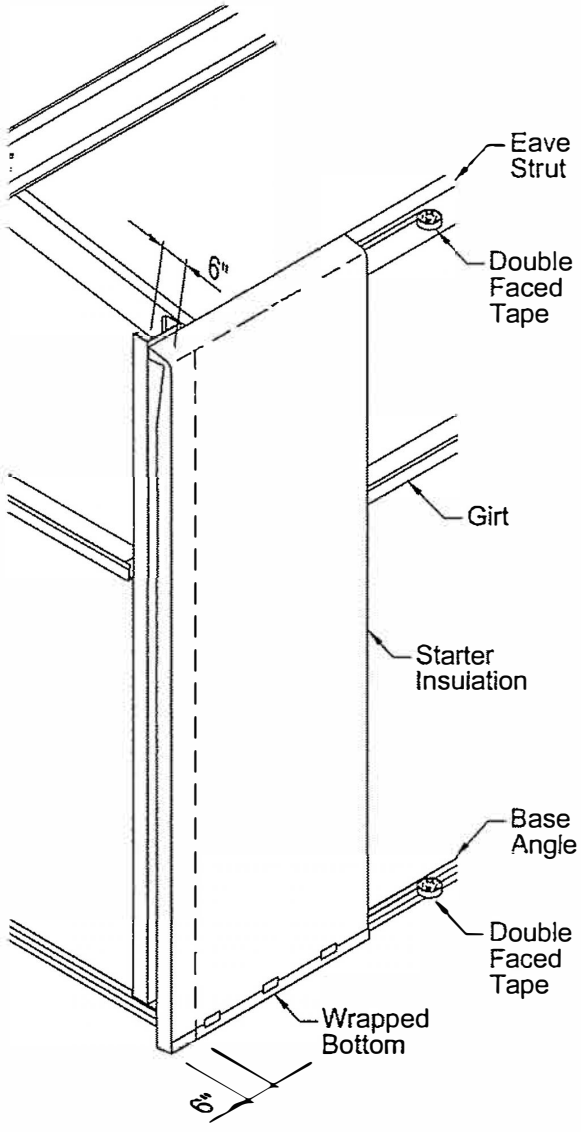

Starting Insulation

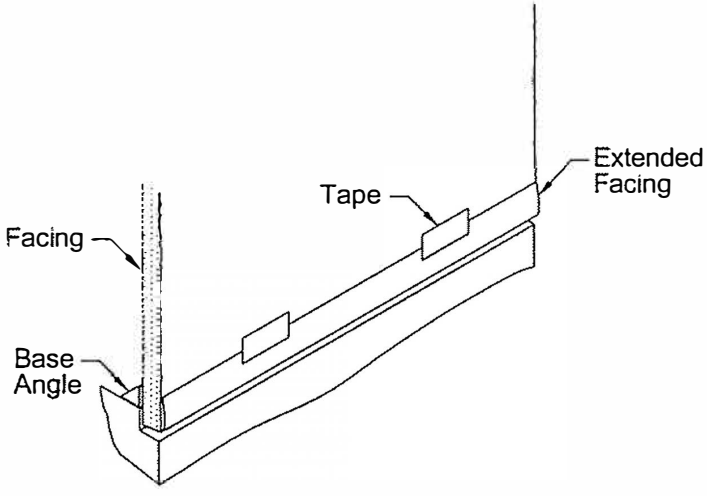

Wrap Bottom of Insulation

10.5 Install the First Panel

- **Set the Panel**

Be sure the panel is correctly turned so the pre-punched holes are aligned with the base angle and girts.

Set the bottom edge of the panel on the sheeting ledge and align the center of the panel ribs with the marks on the sheeting ledge.

Tilt the panel into position.

- **Tack Bottom of Panel**

Check that the center of the ribs are still aligned with the marks and fasten the panel to the base angle with one structural fastener.

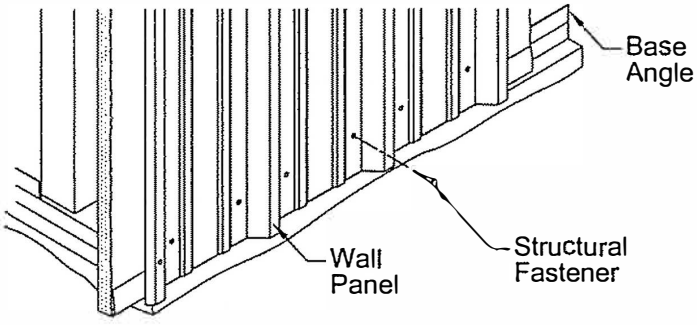

Tack Bottom of Panel

- **Plumb the Panel**

Set a 4' level on the edge of a panel rib and adjust the panel to the plumb position.

- **Fasten the Panel**

Hold the panel in the plumb position and fasten the panel to the eave strut. Complete the installation of all the fasteners to the eave strut and base angle.

To avoid distortion of the panel sidelap, do not fasten the panel to the girts until the next panel is placed and the panel is installed.

Refer to the hole template detail in section 10.3 for the fastener pattern.

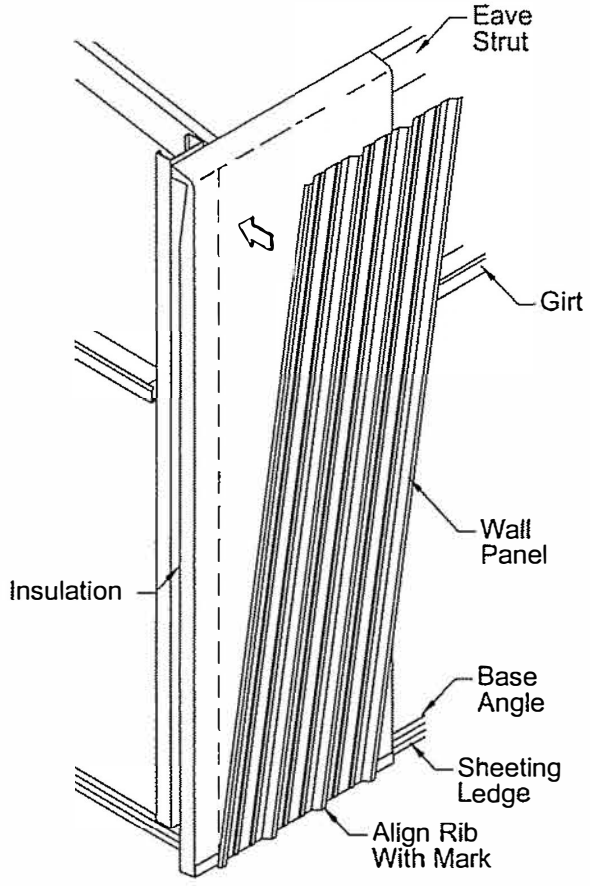

Setting Panel

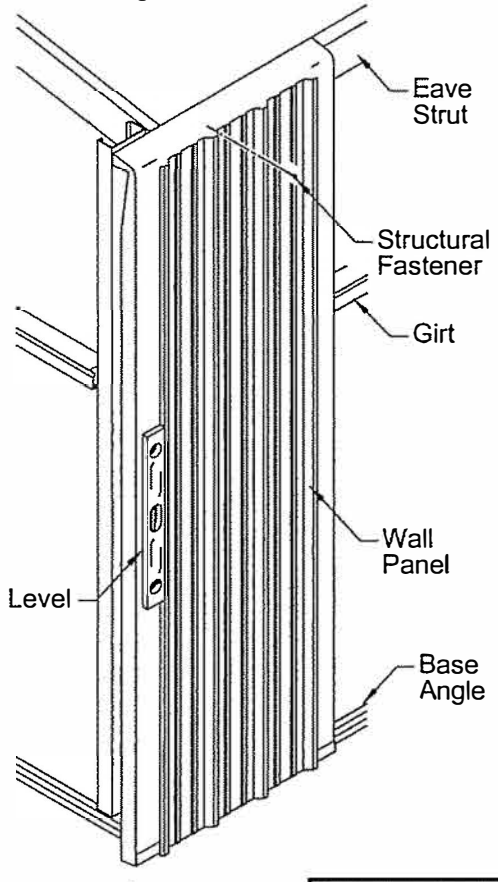

Plumbing Panel

10.6 Installing the Next Panel

- **Install Insulation**

Cut the next run of insulation to length from the appropriate 3' or 6' width roll.

Position the insulation with its edge flush against the edge of the previous insulation. Pull the insulation taut and secure to the retaining tapes.

Roll and staple the insulation side tabs to seal the vapor barrier facing.

- **Install the Sidelap**

Set and align the panel so its last rib nests over the rib of the previous panel.

Fasten the panels together at the lapped ribs with sidelap fasteners at 2' O.C.

Caution: Do not allow the rib of the bottom panel to roll under while installing the sidelap fasteners.

- **Align the Panel**

Align the center of the panel's leading rib with the mark on the sheeting edge.

Tack the bottom of the panel to the base angle with a structural fastener.

Plumb the panel with a level and fasten the panel to the eave strut.

- **Fasten the Panel**

Complete the fastening of the panel to the eave strut and base angle. Again, to avoid distortion of the panel sidelap, do not fasten the panel to the girts until the next panel is placed and the sidelap is fastened.

- **Rib Closures**

If the wall is not insulated, install the inside closure strips between the wall panel and base angle and between the panel and eave strut.

Position the closure strips so they will be secured by the wall fasteners.

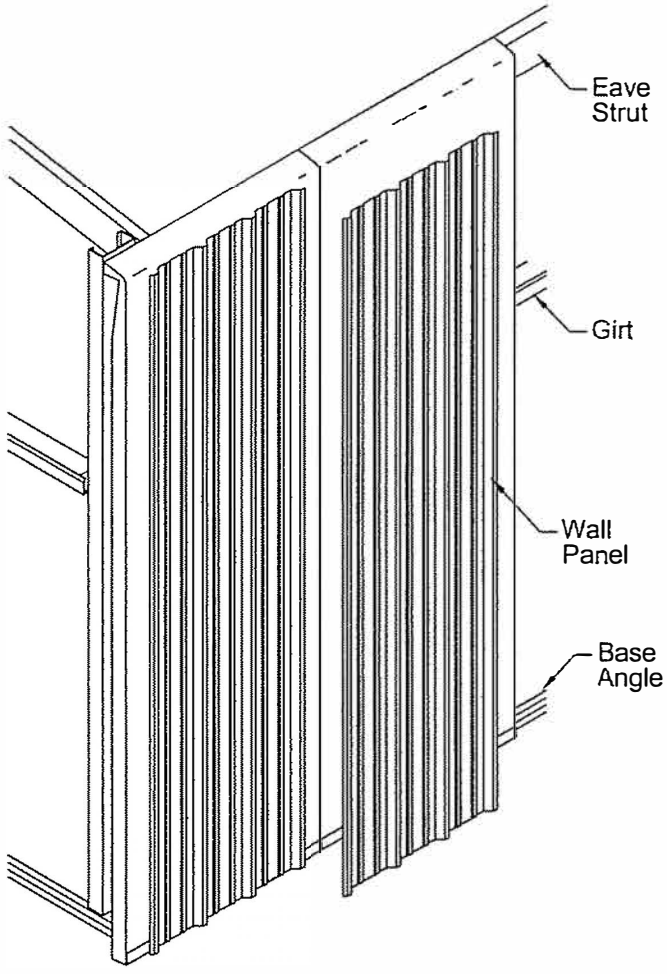

Installing Next Panel

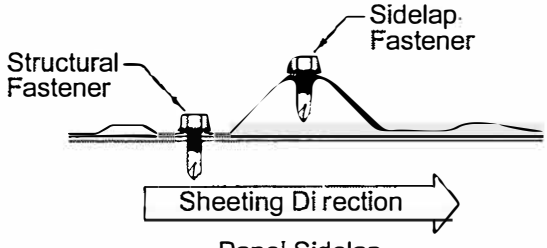

Panel Sidelap

10.7 Complete the Wall

• Install the Panels

Continue the installation of the insulation and panels to the opposite corner.

Install the insulation and panels on the end walls in the same manner as the sidewalls.

• Fit Insulation at Corner

Cut the last insulation section to fit the 6" wrap around from the starter insulation on the adjacent wall.

Cut back the fiberglass and remove to provide a tab for the insulation seam. Roll and staple the tabs.

• Fit Wall Panel at Corner

If the last panel extends past the corner, field cut the panel so its cut edge fits within the corner flashing.

• Install Corner Trim

Carefully align the corner trim to be centered on the corner and parallel to both wall surfaces.

Attach the corner trim to the wall panels with lap fasteners at 2' O.C.

If the corner trim requires a splice, install the bottom section first. Overlap the top section 2" for the splice and rivet as required.

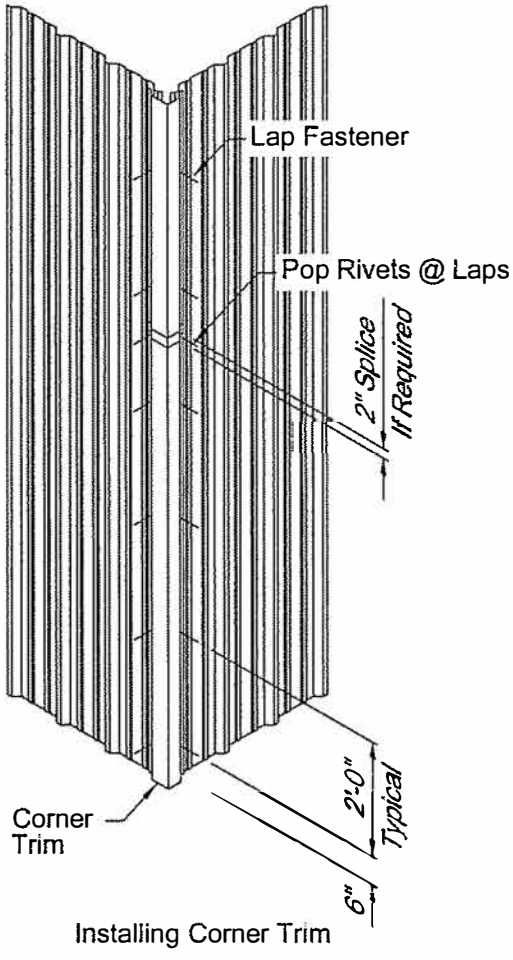

Installing Corner Trim

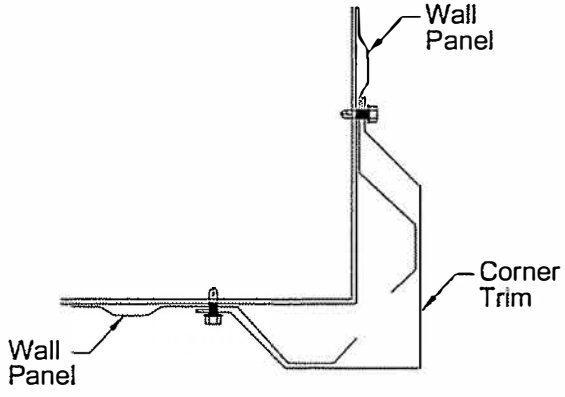

Corner Layout

11.0 ROOF PANEL INSTALLATION

11.1 Preparing the Structure

• Check the Framing

Before starting the panel erection, confirm that the framing is completely assembled, all connections are tightened and all bracing is in place and correctly adjusted.

• Check Vertical Alignment

Check that the top flanges of the eave strut, purlins and rake angle are all in alignment and are all in alignment on the same plane.

• Horizontal Alignment

Check that the purlins and eave struts are straight and parallel. Check that the rake angles are along a straight line.

• Blocking

Wood spacers may be required to remove sag and straighten the purlins parallel to the eave struts. This can be done with scrap lumber cut to proper length and wedged between the roof structurals. As each bay is finished, the spacers can be moved to the next bay before proceeding with the roof paneling.

Caution: To prevent injury from falling blocking, nail retaining cleats onto the ends of the blocking.

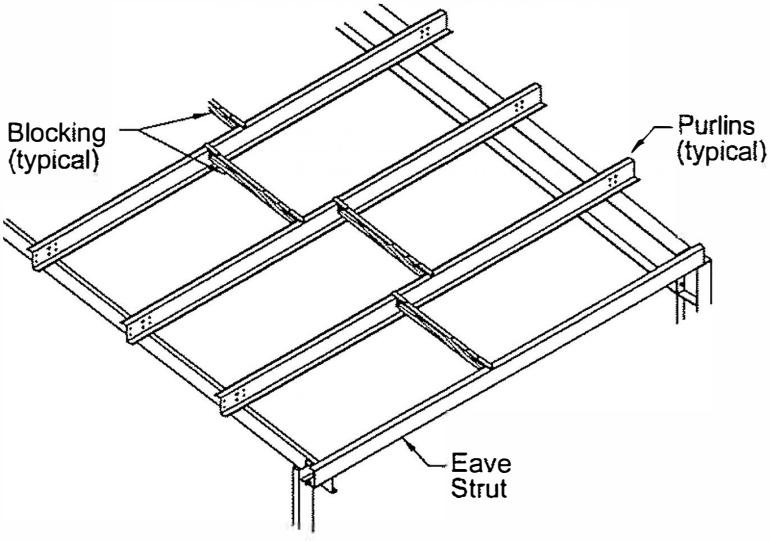

Blocking the Purlins

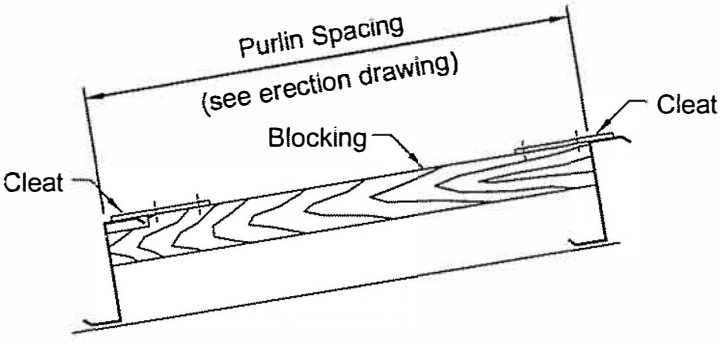

Blocking Between Purlins

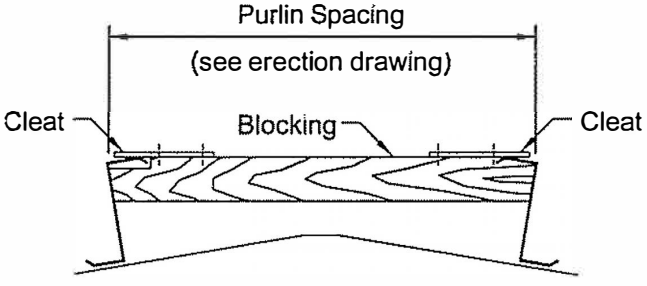

Blocking Between Ridge

11.2 Install the Eave Trim

The following details show the standard eave trim and wall panel conditions. For other conditions reference the project's erection drawings.

- **Align End of Trim**

Set the end of the trim flush with the face of the wall corner trim.

- **Align Face of Trim**

Position the face of the trim so the bottom leg is flush with the wall panel and the top is parallel with the top flange of the eave strut.

- **Secure Bottom of Trim**

While holding the trim in position, fasten the trim's bottom flange to the wall panel with lap screws at 1'-0 on center.

- **Secure Top of Trim**

Secure the top flange of the trim to the eave strut with roof screws at 4' on center.

Note: These are temporary screws which must be removed as the roof panels are installed.

- **Splicing Eave Trim**

Before installing the next section of trim, apply tube sealant across the end of the installed trim.

Lap the next trim section 2" over the installed trim and secure the lap with three blind rivets in the trim face.

Cut the last section of trim so its end is flush with the face of the wall corner trim.

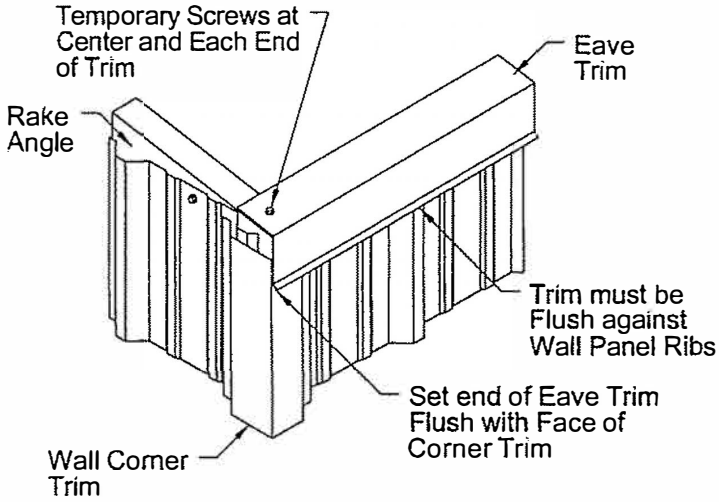

Start Eave Trim @ Corner

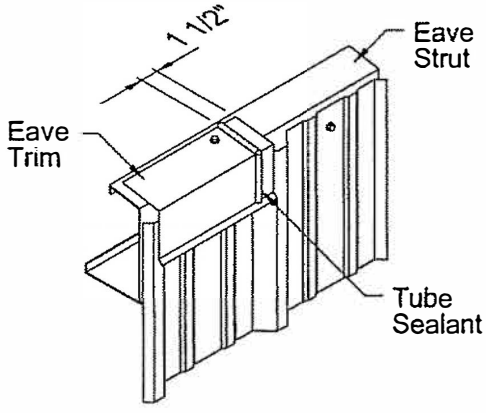

Apply Sealant @ Splice

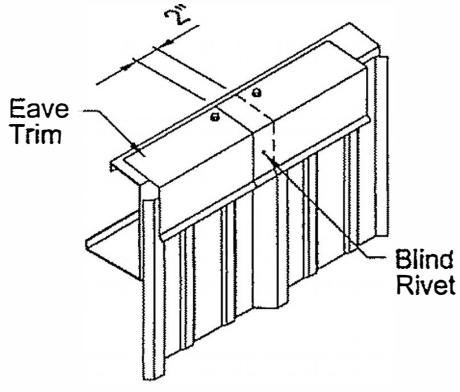

Lap and Fasten Splice

11.3 Roof Sheeting Layout

- **Eave to Ridge Panel Assembly**

To assure proper assembly and sealing, the roof panels must be installed in sequence from the eave to the ridge on each slope. Ridge caps are installed last.

- **Complete Each Panel Run**

Each run of panels from eave to ridge must be completed on both sides of the building before starting the next panel run.

- **Continuous Insulation Runs**

Each roof insulation run must be continuous from eave, over the ridge, to the opposite eave, to coincide with the roof panel runs.

If the insulation is not available in sufficient lengths for a continuous run, the insulation must be spliced over a purlin.

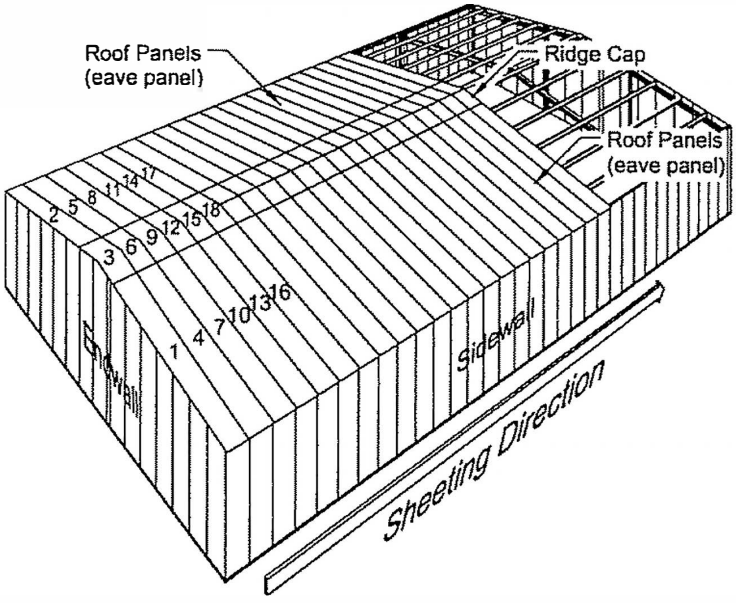

Single Panels Per Slope
(numbers indicate panel assembly sequence)

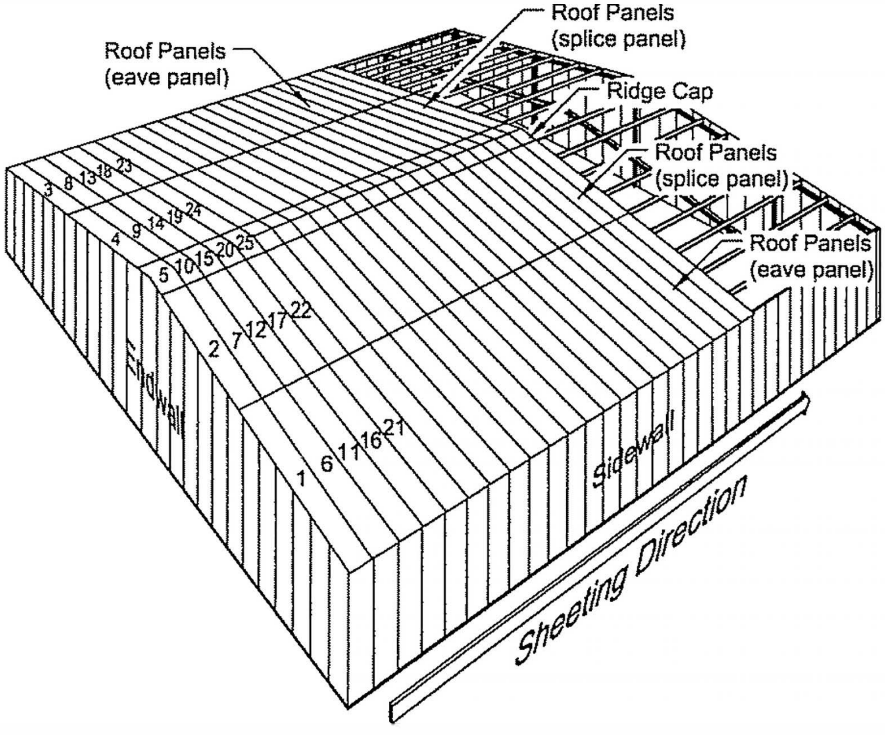

Multiple Panels Per Slope
(numbers indicate panel assembly sequence)

11.4 Pre-Drilling Panels

• Importance

When using self-drilling screws, pre-drilling the panels for the structural fasteners is not necessary.

Pre-drilling the panels for sidelap fasteners helps maintain proper side lap fit and prevents "cocked" fasteners.

Care must be taken to assure accurate layout and drilling of the holes.

• Preparing the Template

Make a template panel for each roof slope to ensure correct lap direction and location of drill holes for the sidelap fasteners.

Layout the hole pattern on the overlapping rib of the template panel and drill the holes with a 3/16" dia. bit.

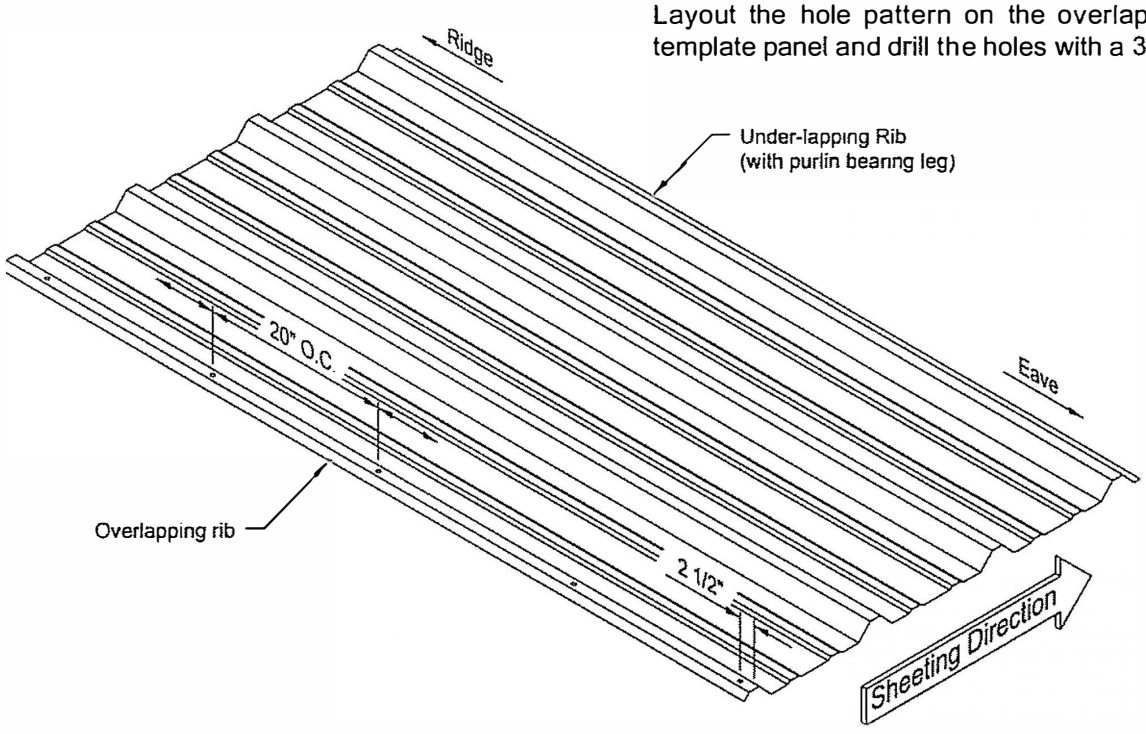

Roof Panel Hole Template

• Stack Drilling Panels

Separate panels for each roof slope, by length and location, into stacks of no more than ten panels. Place the template on the stack and align it with the top panel of the stack.

Mark the top panel through the holes in the template, then remove the template.

Secure stack with clamps and blocks, so that all panels are laying flat, properly nested at corrugations and aligned at the ends and sides.

Now, drill holes through stacks, using template marks as bit guide.

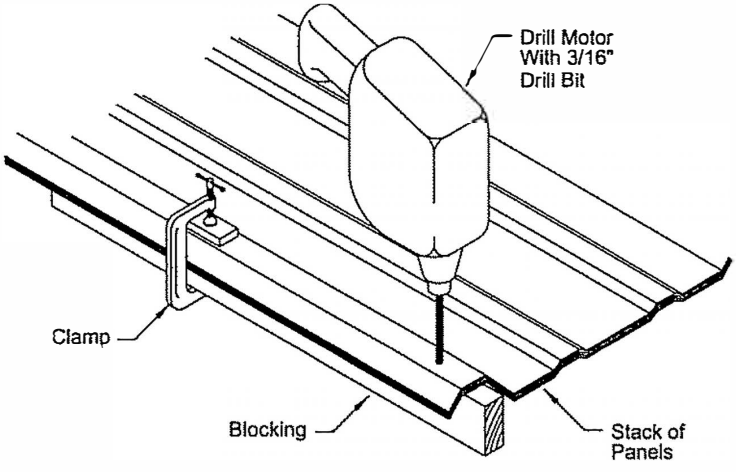

Pre-Drilling Panels

11.5 Starting the Insulation

• Continuous Insulation Runs

Each roof insulation run must be continuous from start eave over the ridge to the opposite eave to coincide with the roof panel runs.

If the insulation is not available in sufficient lengths for a continuous run, the insulation must be spliced over a purlin.

• Apply Retaining Tape

Apply the double faced insulation retaining tape along the top flange of both eave struts.

• Cut Insulation to Length

If not already cut to length, cut the starter (4') roll of insulation to a length 12" longer than the eave to eave dimension.

• Align Insulation

Position the insulation with one edge extending 6" beyond the face of the rake angle. Position bottom ends of the insulation 6" beyond the face of each eave strut.

• Tighten and Secure Insulation

At one eave strut, square up the insulation and press the insulation facing against the retaining tape. Press firmly to assure complete adhesion. At the opposite eave strut, pull the insulation until the facing is taut and adjust to remove wrinkles. Press the insulation facing against the retaining tape.

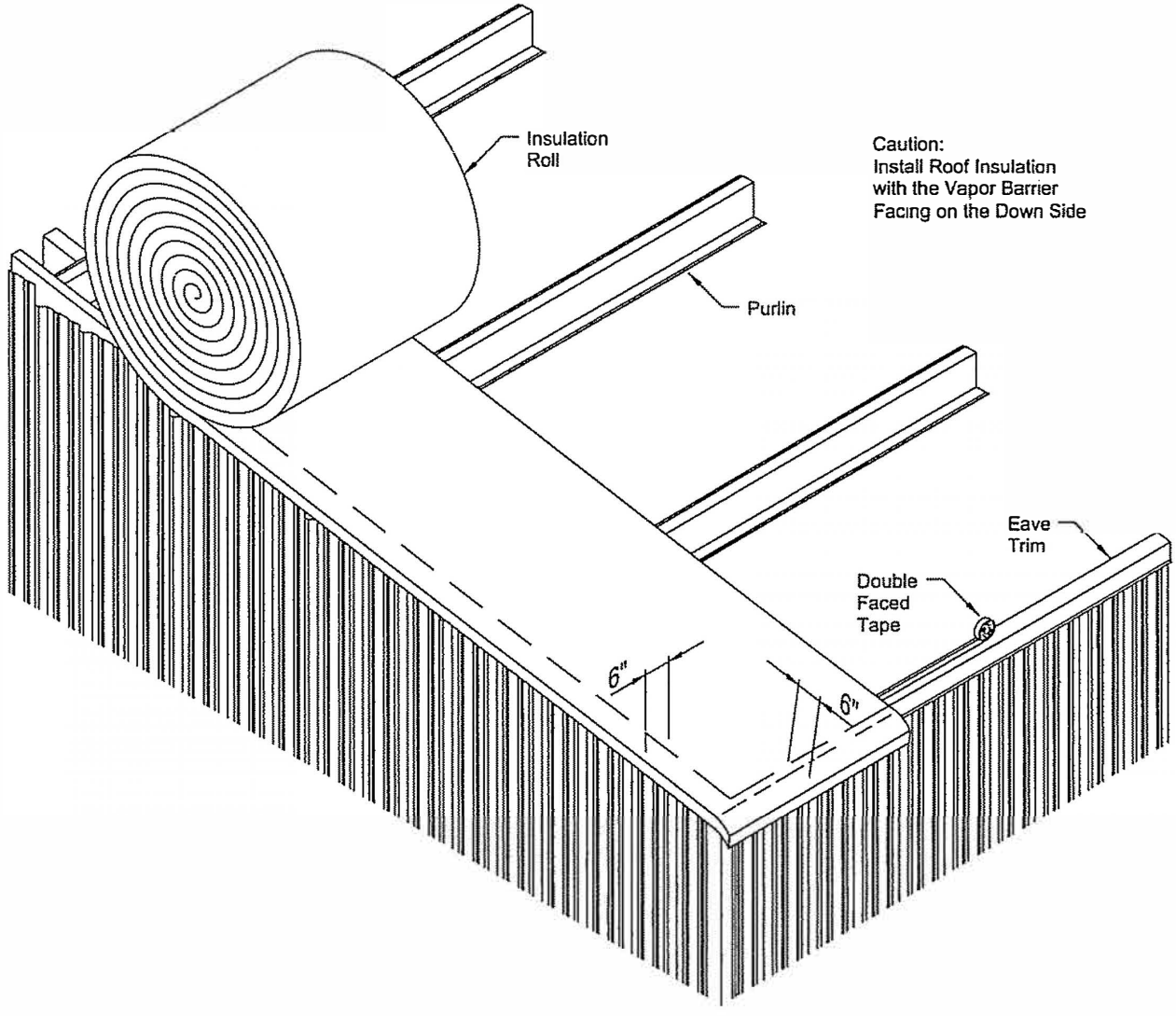

Starting The Insulation

- **Perimeter Vapor Seals**

To assure continuity of the insulation vapor barrier function at the eaves and rake, the facings of the roof and wall insulation are wrapped and lapped as shown in the following details.

To prevent upward deflection of the roof panel caused by build-up of lapped insulation, the excess fiberglass must be cut off and removed so only the facings are lapped for the vapor seal.

- **Wrap Insulation at Eave**

Cut back the fiberglass 2 ½" from the face of the eave trim. Do not cut the insulation facing.

Wrap the bare facing over the end of the remaining fiberglass and secure in place with insulation tape.

- **Wrap Insulation at Rake**

Cut back the fiberglass flush with the face of the rake angle. Do not cut the insulation facing.

Wrap the bare facing over the edge of the remaining fiberglass and secure in place with insulation tape.

- **Lap Facings at Rake**

Cut back the wall insulation's fiberglass flush with the top surface of the roof insulation. Do not cut the insulation facing.

Lap the bare facing over the wrapped roof insulation facing and secure with insulation tape.

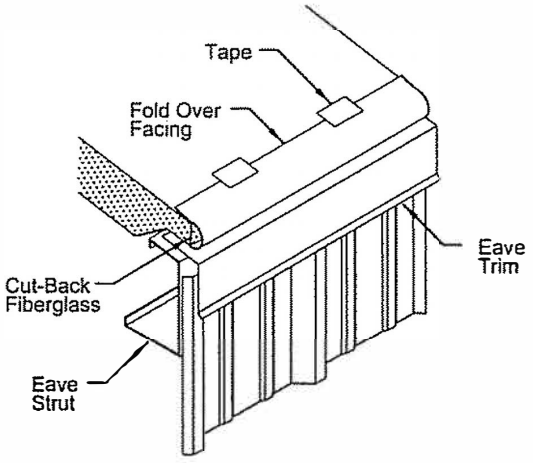

Wrapping Roof Insulation @ Eave

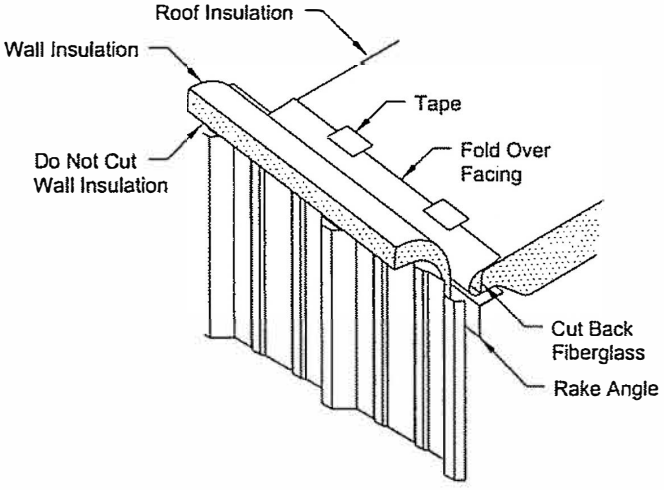

Wrapping Roof Insulation @ Rake

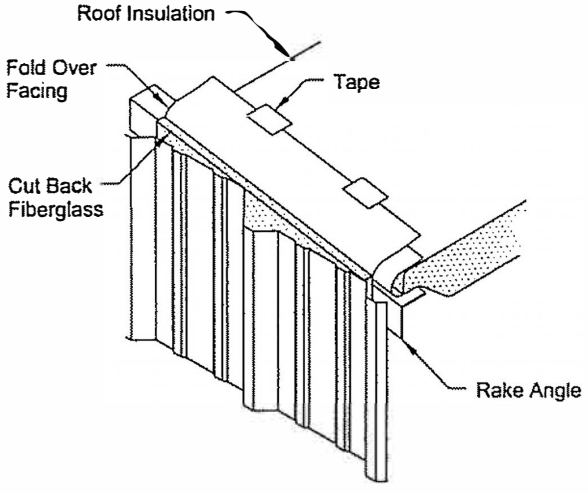

Lapping Facing @ Rake

• **Splicing Roof Insulation**
Whenever possible the roof insulation rolls should be in lengths which can extend across the roof from eave to eave. If the building width makes this impossible, splice the insulation as shown in these details.

To provide an effective vapor barrier, the insulation facings must be overlapped at the splice.

To prevent upward deflection of the roof panel caused by build-up of lapped insulation, the excess fiberglass must be cut off and removed so only the facings are lapped for the vapor seal.

• **Secure End of First Roll**
Apply insulation retaining tape along the top flange of the purlin. Stretch the insulation and secure its facing to the retaining tape.

Cut back the fiberglass flush with the down-slope edge of the purlin's tope flange. Cut off the excess facing flush with the up-slope edge of the purlin's top flange.

• **Secure End of Second Roll**
Apply insulation retaining tape along the bare facing of the first roll directly over the top flange of the purlin.
Position the end of the second roll so its end butts flush against the fiberglass of the first roll.

Secure the insulation's facing to the retaining tape.

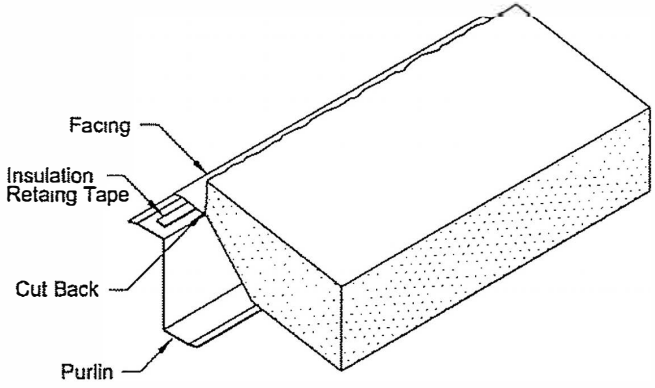

Securing Endlap 1st Roll

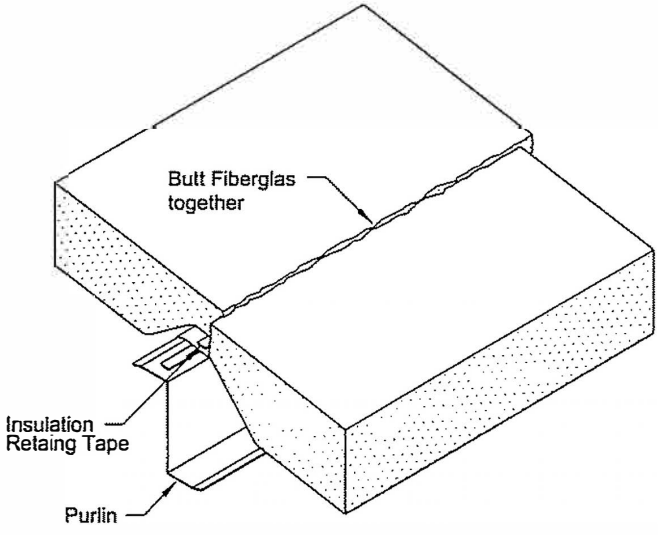

Securing Endlap 2nd Roll

11.6 Installing the Eave Closures
• **Align End of Closure Strip**
Position the first closure strip so a full corrugation is centered over the face of the rake angle.

Cut off excess closure strip flush with the face of the wall corner trim.

• **Align Edge of Closure Strips**
Position the edge of the closure strips at 1 1/4" from the face of the eave trim.
Caution: The closure strips must be positioned over the eave strut so the panel attachment screws will penetrate and secure the closure strips.

• **Join Closure Strips**
To provide sufficient closures for the first roof panel, join the end of the next closure to the first closure and align its edge.

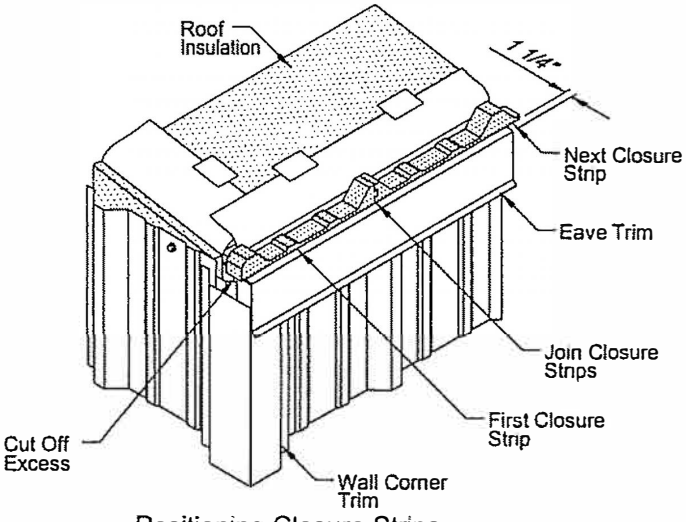

Positioning Closure Strips

Note: It may be helpful to secure the first closure strip to the eave trim with insulation retaining tape.

11.7 Position the First Panel

• Confirm Panel Length

Before installing the first panel, measure its length to assure that it is the correct panel as specified on the erection drawings.

• Orient the Panel

Be sure the panel is correctly turned so the purlin bearing leg is away from the rake.

• Align the Panel Edge

Position the panel so the outer rib is centered over the face of the rake (or inner face of the wall panel).

Caution: Check the edge alignment at both ends of the panel.

• Align the Panel End

Slide the panel up or down the roof slope so the end of the panel is 2" beyond the face of the eave trim.

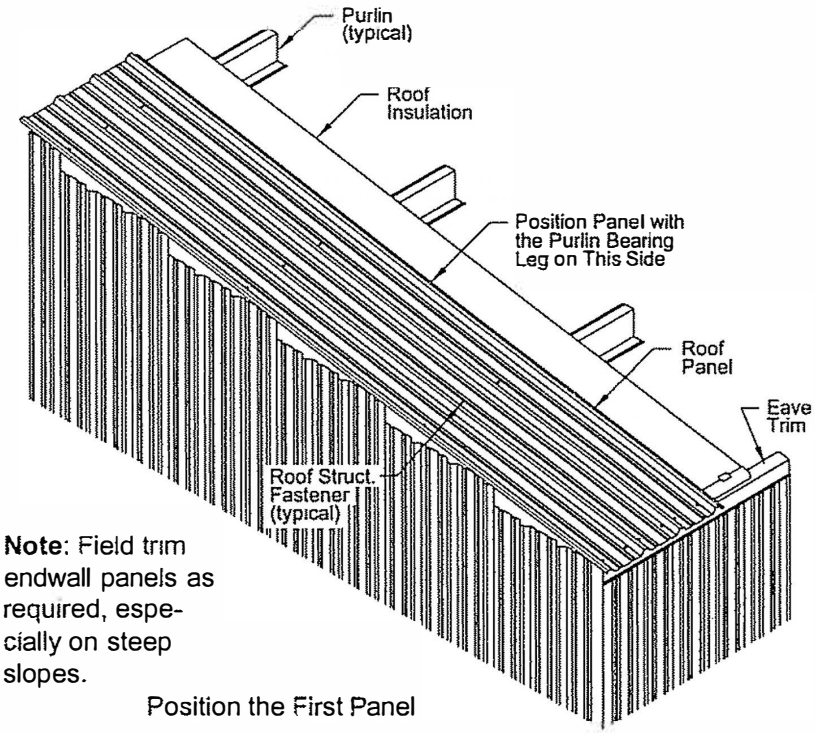

Note: Field trim endwall panels as required, especially on steep slopes.

Position the First Panel

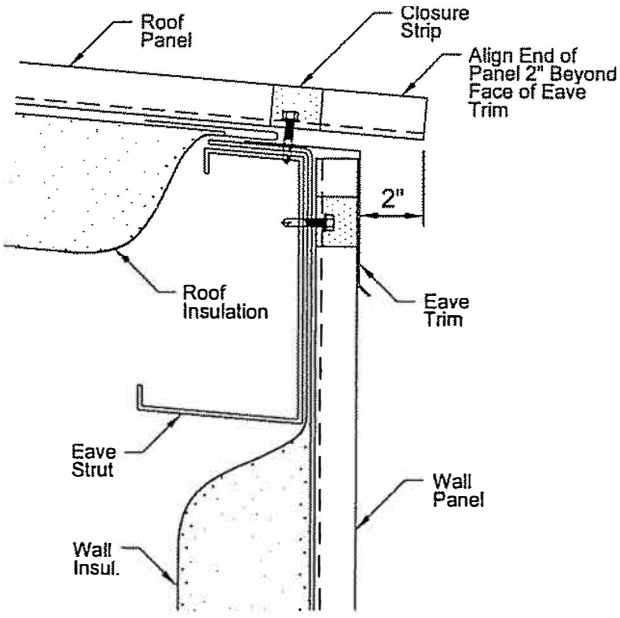

Align Panel End

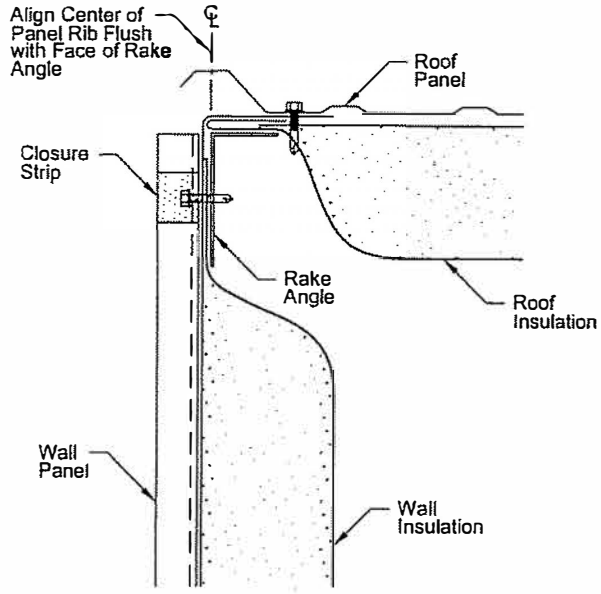

Align Panel Edge

11.8 Fasten the First Panel

- **Check Panel Alignment**

Before fastening the panel, check that its edge and end alignment are correct.

- **Check Closure Strip Alignment**

Also check that the closure strip alignment is correct.

Caution: Do not fasten the panel to the upper most purlin at this time.

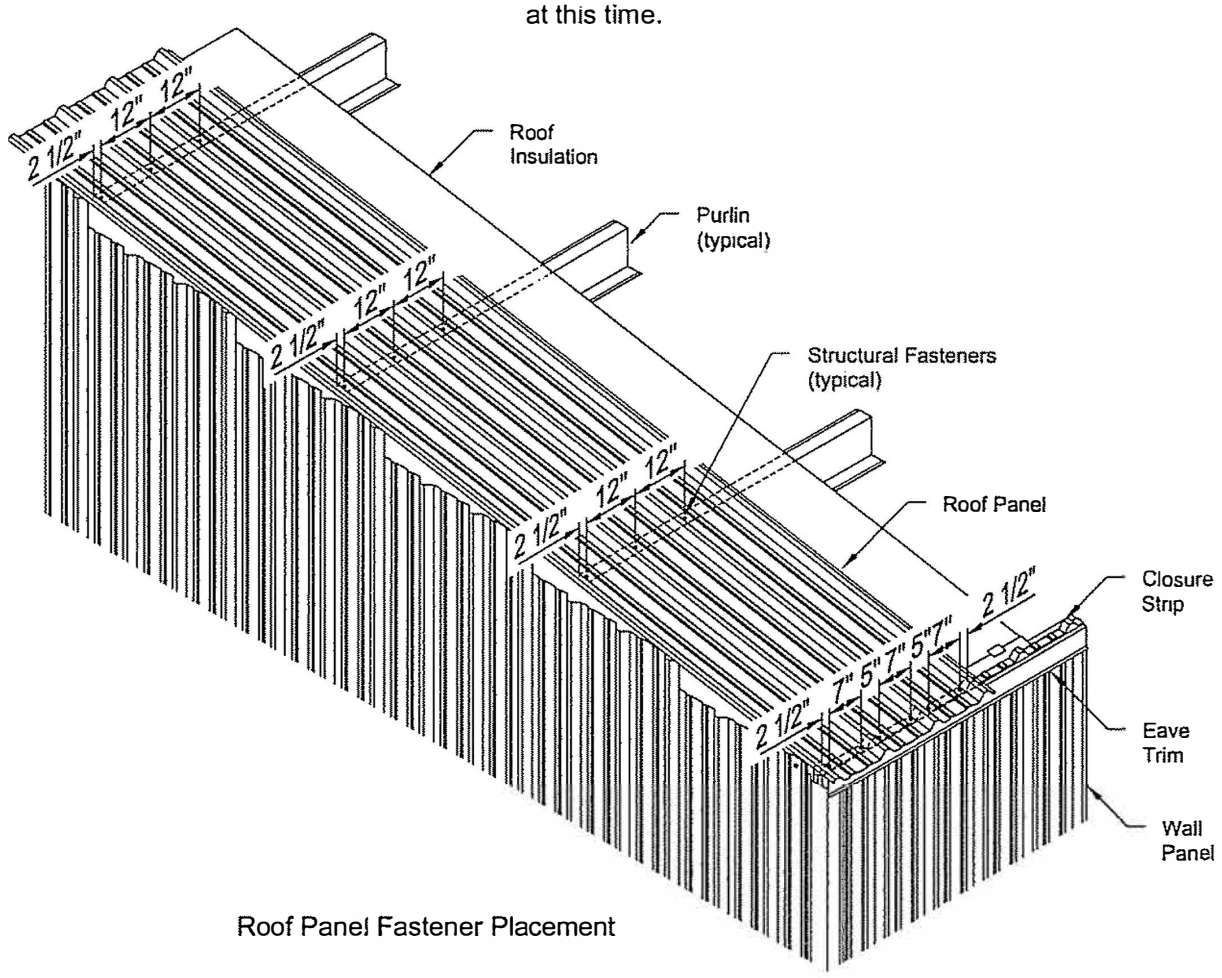

Roof Panel Fastener Placement

- **Install Fasteners at Structurals**

Starting along the rake edge of the panel, fasten the panel to the eave strut and each purlin except the uppermost purlin.

Position the fasteners at the center of the purlin top flange and place at the spacings shown.

At the eave, position the fasteners to penetrate the center of the closure strips and into the top flange of the eave strut.

11.9 Install Sealant on First Panel

• Apply Sidelap Sealant

Apply tape sealant continuous from panel eave end to upper end along the panel rib (see Sidelap Sealant Alignment detail). Extend the sealant flush with the panel ends.

• Apply Endlap Sealant

Apply tape sealant continuous from panel outer edge to opposite edge across the up-slope end of the panel.

Align the sealant with the down-slope edge of the purlins top flange.

• Apply Endlap Pigtail Sealant

Apply a strip of tape sealant along the top edge of the panel rib.

Lap one end over the endlap sealant and extend the other end 2" down-slope of the endlap sealant.

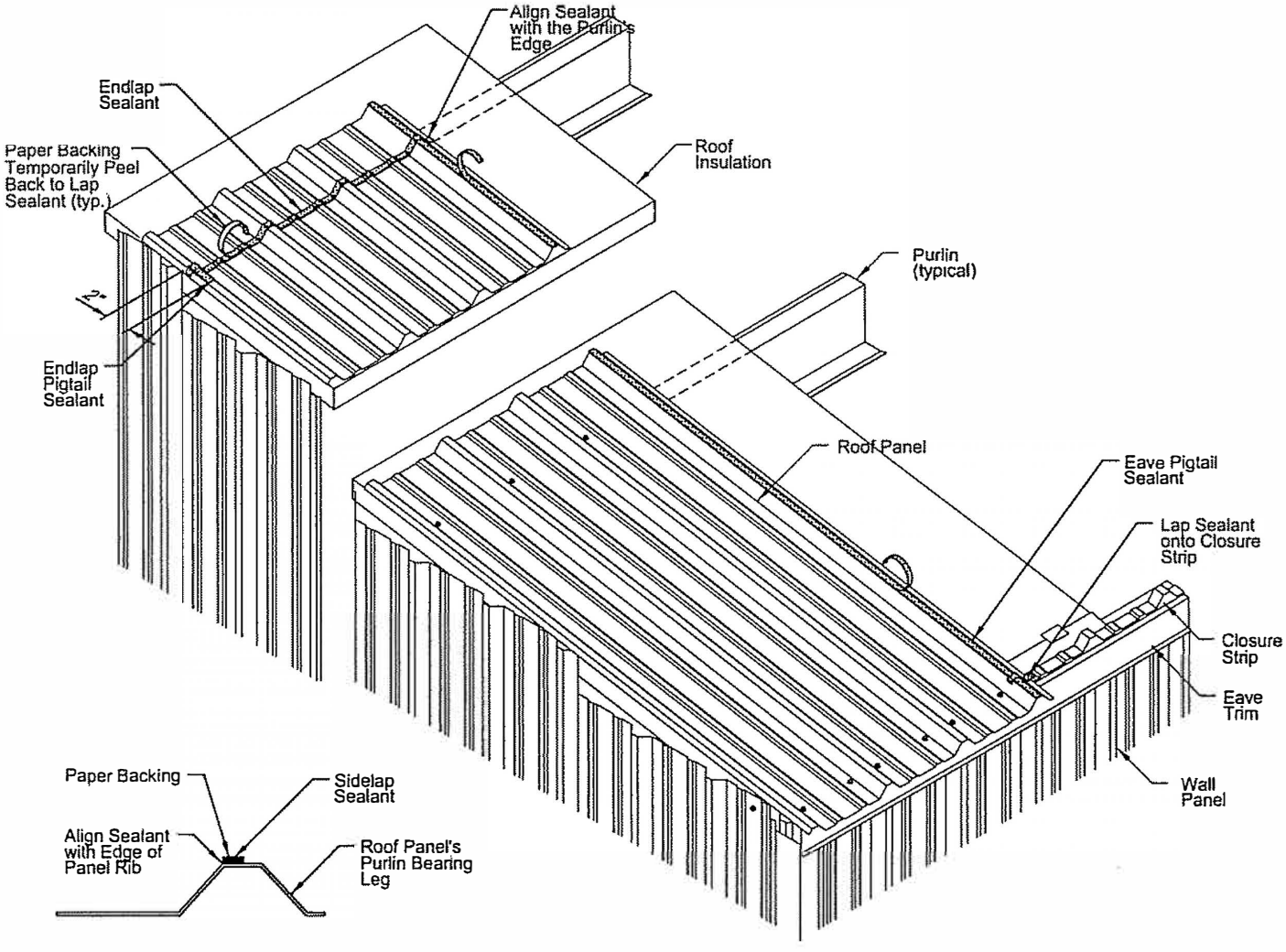

Sidelap Sealant Alignment

Roof Panel Lap Sealant Placement

• Apply Eave Pigtail Sealant

Apply a strip of sealant at the eave to engage the sidelap sealant and extend to the panel edge.

Lap 1/2" over the exposed closure strip and extend the other end to lap over the sidelap sealant.

Caution: To protect the sealant from contamination, do not remove the paper backing until immediately before installation of the next panel.

11.10 Position and Fasten Second Panel

If the building has multiple panels per slope, install the next panel up-slope in a similar manner as the down-slope panel.

- **Confirm Panel Length**

Before installing the first panel, measure its length to assure that it is the correct panel as specified on the erection drawings.

- **Orient the Panel**

Be sure the panel is correctly turned so the purlin bearing leg is away from the rake.

- **Align the Panel Edge**

Position the panel so the outer rib is centered over the face of the rake (or inner face of the wall panel).

- **Align the Panel End**

Position the down-slope end of the panel to lap over the installed panel.

Align the down-slope end to extend 1" below the down-slope edge of the purlin top flange.

Check that the panel end fully nests onto the installed panel and fully contacts the endlap sealant.

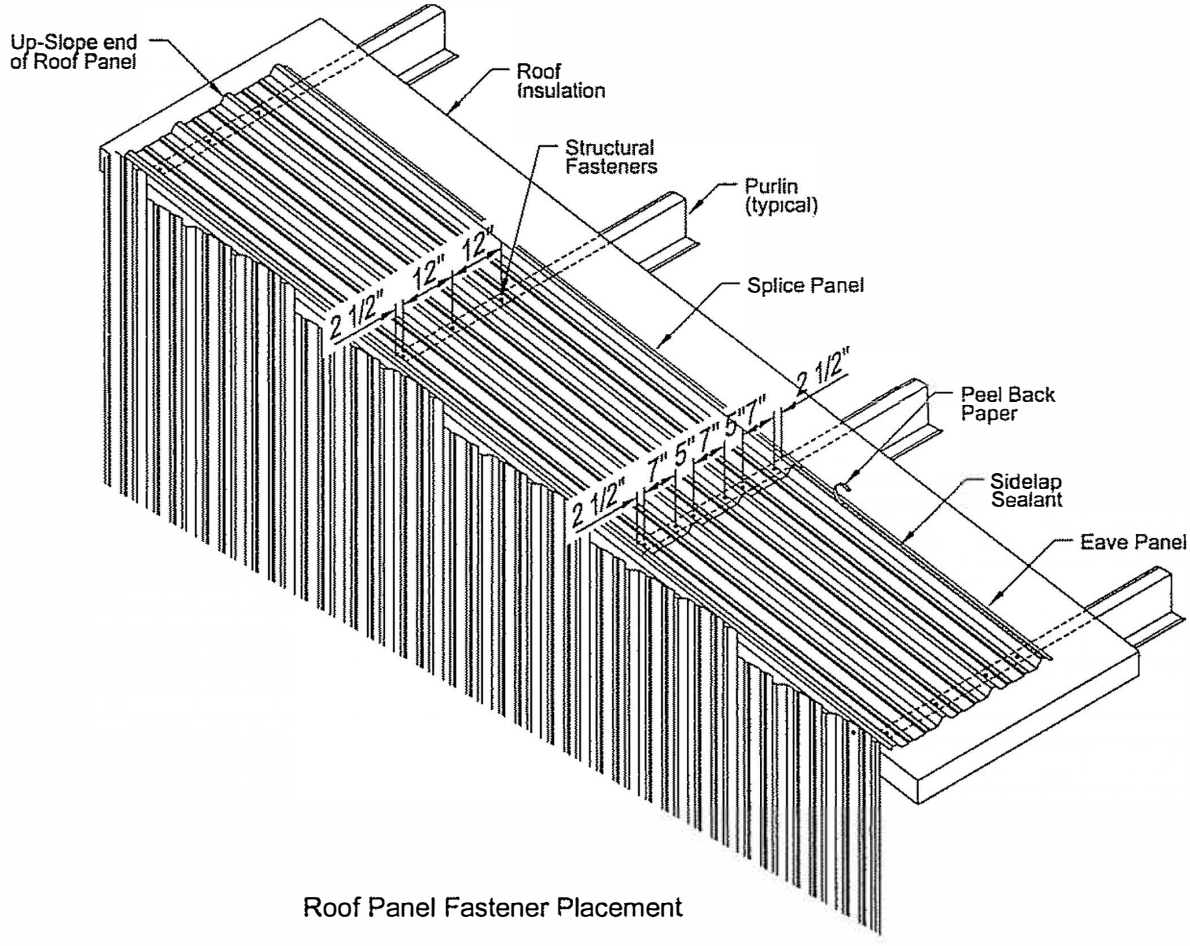

Roof Panel Fastener Placement

- **Install Fasteners at Structurals**

Fasten the panel to the purlins in the same manner as the down-slope panel (except the uppermost purlin).

At the endlap, position the fasteners at the center of the purlin top flange and place at the spacings shown.

Position the fasteners at the center of the purlin top flange and at the spacings shown.

Caution: Do not fasten the panel to the upper most purlin at this time.

11.11 Install Sealant on Second Panel

• Apply Sidelap Sealant

Apply tape sealant continuous from ½" below the down-slope end to upper end along the panel rib in the same location as the first panel.

Caution: Be sure the sidelap sealant overlaps the sealant on the down-slope panel by at least ½".

• Apply Endlap Sealant

Apply tape sealant continuous from panel outer edge to opposite edge across the up-slope end of the panel. Align the sealant with the down-slope edge of the purlins top flange.

• Apply Endlap Pigtail Sealant

Apply a strip of tape sealant along the top edge of the panel rib at the rake.

Lap one end over the endlap sealant and extend the other end 2" down-slope of the endlap sealant.

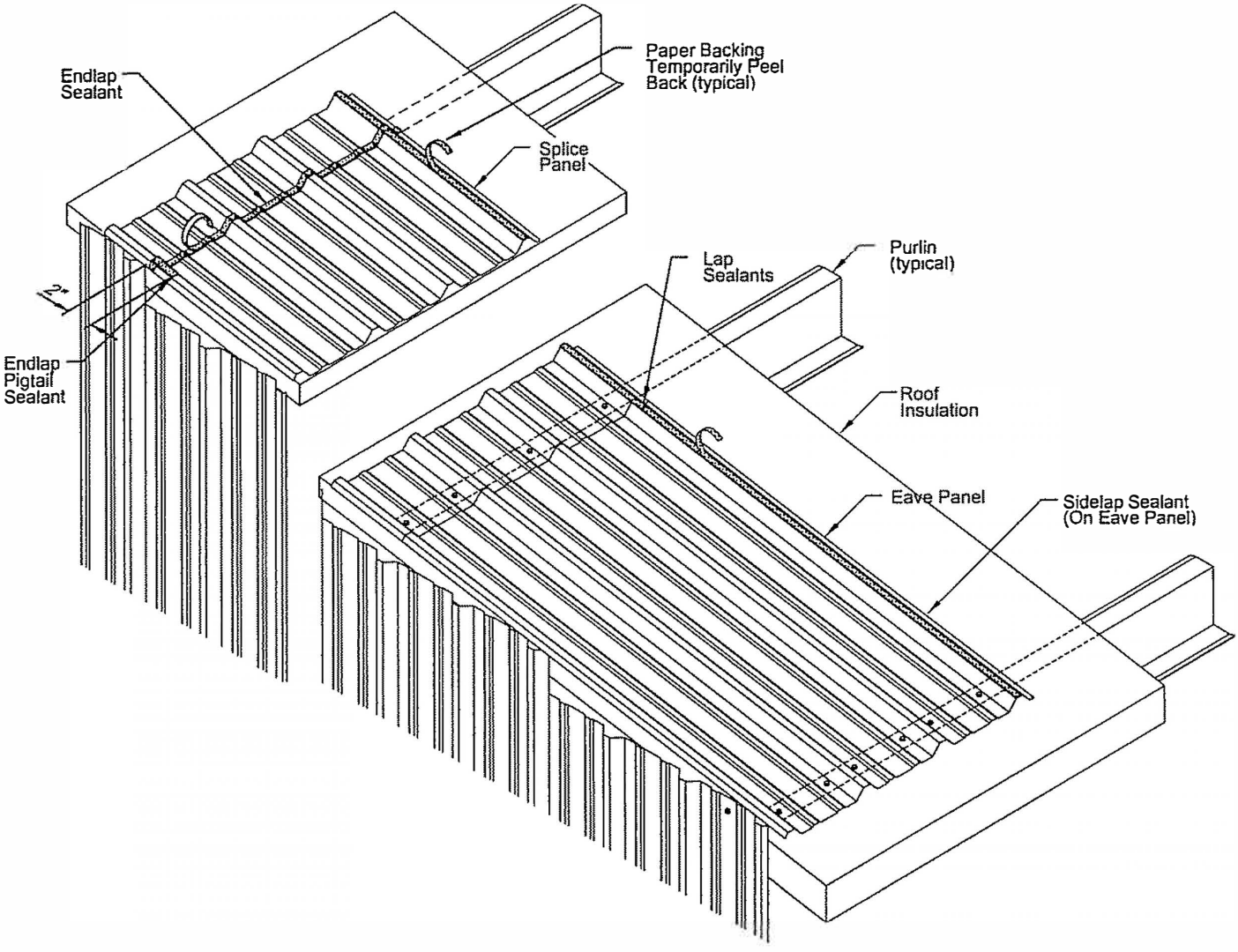

Roof Panel Lap Sealant Placement

11.12 Complete the Panel Run

- **Additional Panels Per Slope**

If the building has additional panels per slope, continue installation of the additional panel following the same procedures as described previously.

- **Install Panels on Opposite Slope**

After completing the panel run on one slope, install panels on the opposite slope in a similar manner.

Caution: Be sure to reverse the installation details on the opposite slope.

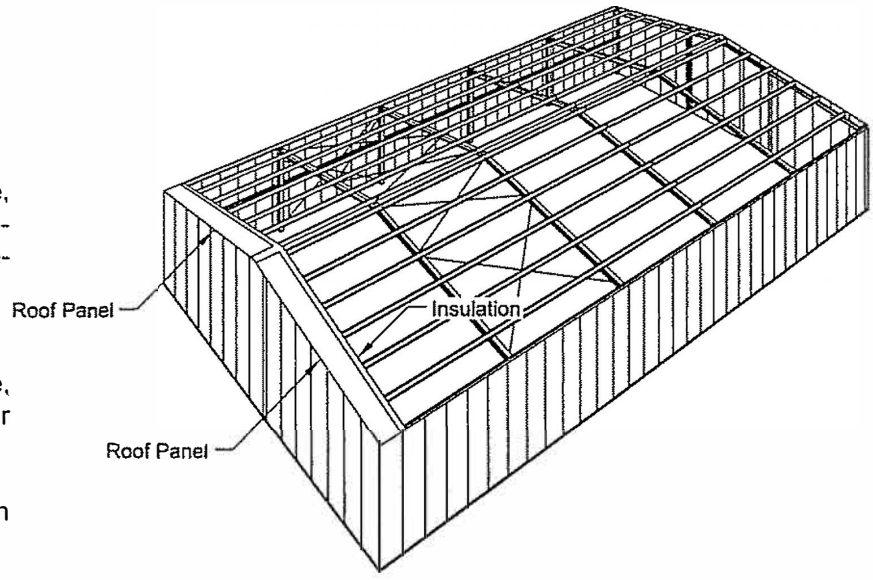

Complete the Panel Run on Both Sides

11.13 Position and Fasten the Ridge Cap

- **Orient the Ridge Cap**

If the ridge cap has a purlin bearing leg, position it away from the rake.

- **Center the Ridge Cap**

Position the ridge cap so its peak is centered between the ridge purlins.

- **Align the Ends**

Position the ridge cap ends to lap over the roof panels.

Check that the ridge cap ends fully nest over the installed panels and fully contact the endlap sealant.

- **Install Fasteners**

Position the fasteners at the center of the purlin top flange and place at the spacings shown.

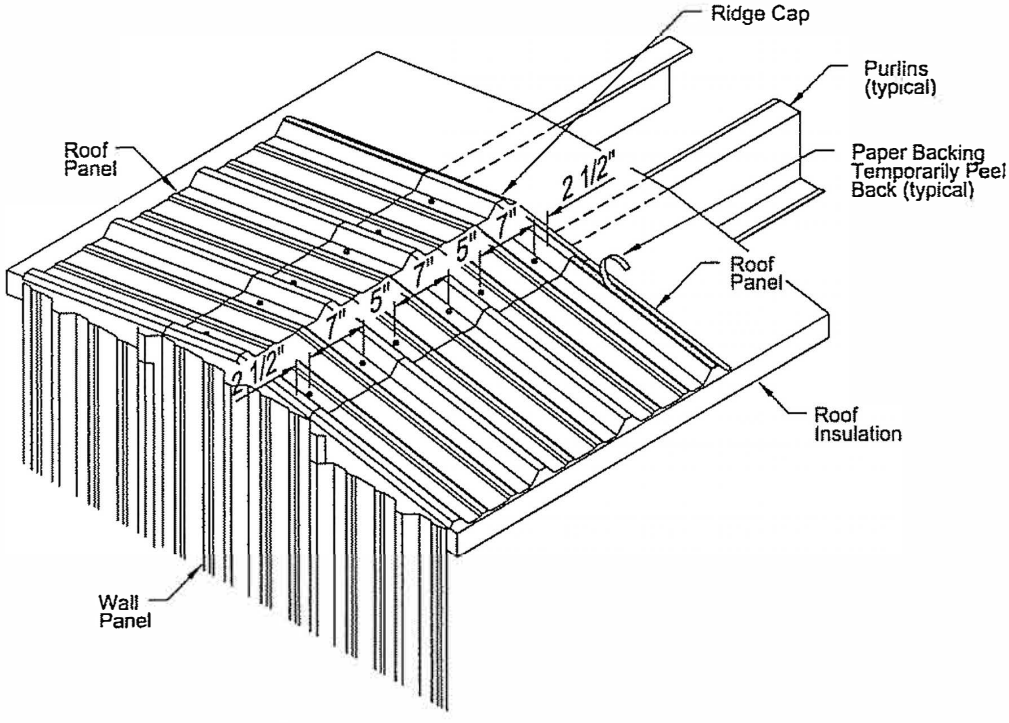

Ridge Cap Fastener Placement

11.14 Preparation for Next Panel Run

• Install Insulation

Install the next run of insulation and r4oll and staple the tabs between the insulation runs.

• Install Eave Closure

Join the next closure strip to the end of the previous closure and align the closure on the eave trim.

11.15 Install Next Down-Slope Panel

• Orient the Panel

Check that the panel is turned so its purlin bearing leg is away from the rake.

• Align the Panel End

Position the panel so the down-slope end is 2" beyond the face of the eave strut.

Caution: Error can occur if the panel is aligned with the end of the adjacent panel. Always check the projection of the panel end beyond the face of the eave trim.

• Align Panel Sidelap

Position the panel so its rib laps over the rib of the previous panel. Check that the rib is fully nested and in contact with the sidelap sealant along the full length of the panel.

• Install Fasteners at Sidelap

To hold the sidelap in position, installing the fasteners at each end of the panel first. Do not install a fastener within 12" of the panel's up-slope end at this time.

Install the sidelap fasteners in the center of the rib at the spacing shown.

• Install Fasteners at Structurals

Fasten the panel to the eave strut and purlins in the same manner as the previous panels.

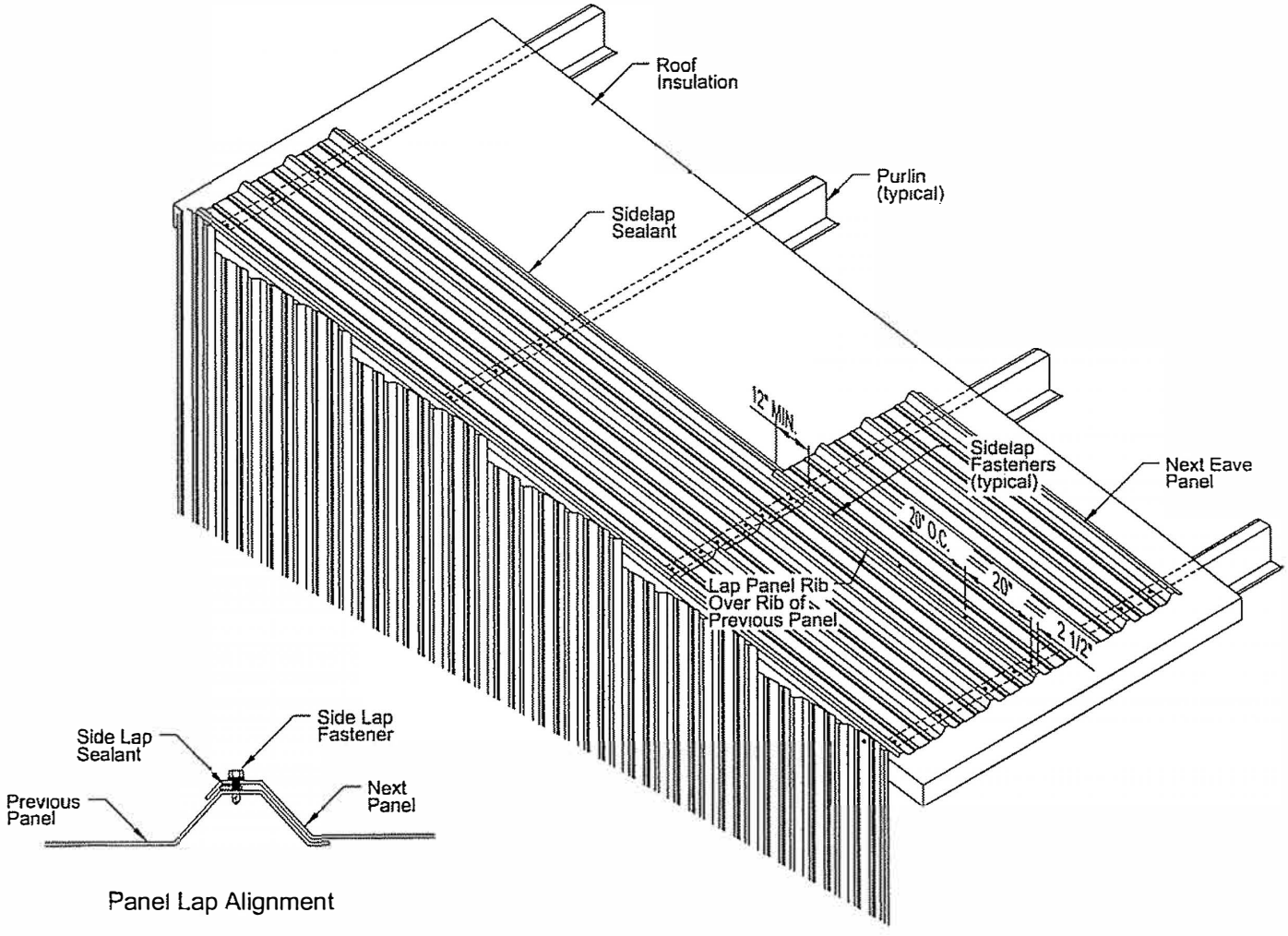

Panel Lap Alignment

Roof Panel Sidelap Fastener Placement

11.16 Install Tape Sealant

- **Apply Sidelap Sealant**

Apply the sidelap sealant in the same manner as the previous panel.

- **Apply Eave Pigtail Sealant**

Apply the eave pigtail sealant in the same manner as on the previous panel.

- **Apply Endlap Pigtail Sealant**

Apply a strip of tape sealant along the up-slope top edge of the panel's rib.

Lap 1/2" over the previously installed panel's sidelap sealant and extend the other end to lap over the endlap sealant.

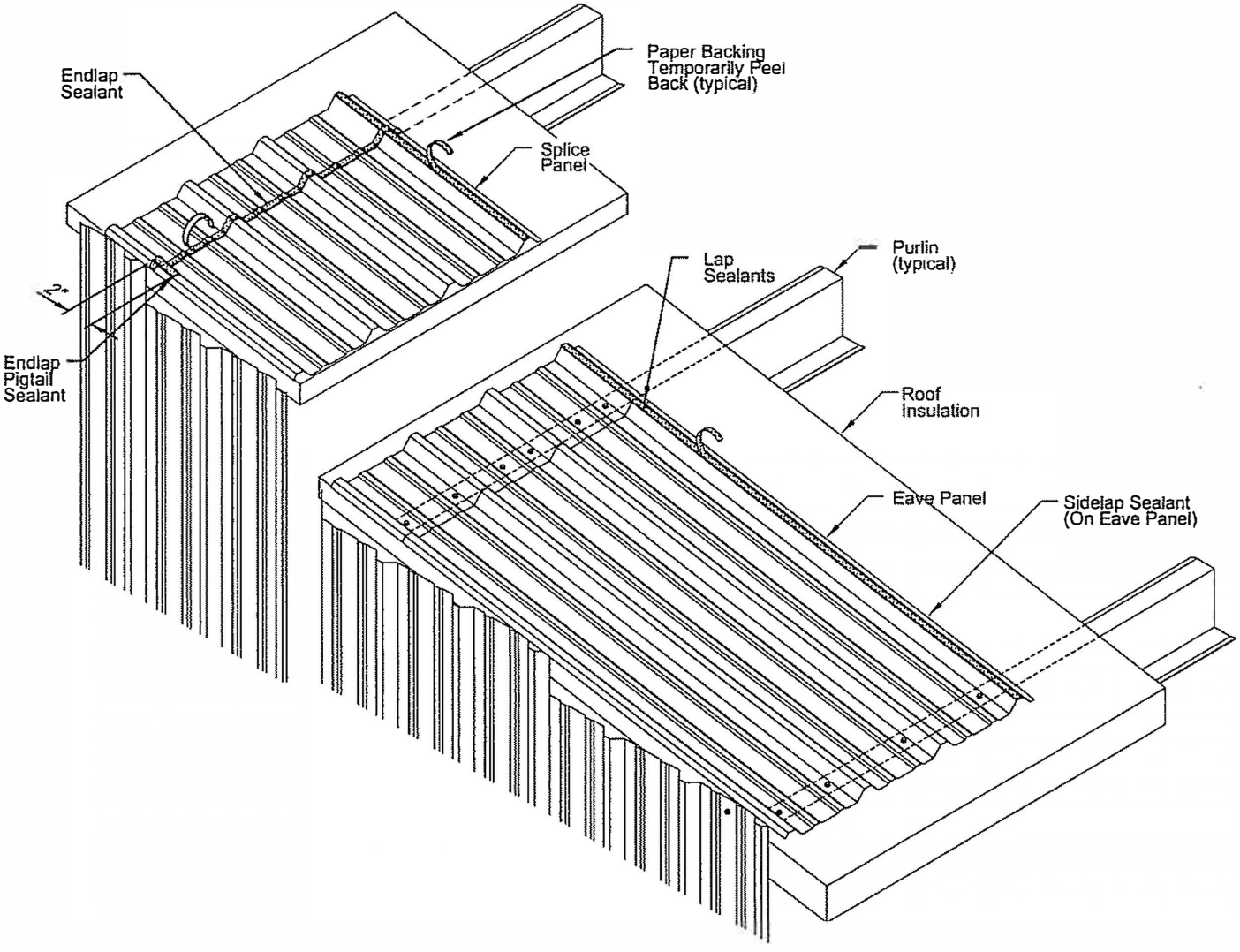

Roof Panel Lap Sealant Placement

11.17 Install the Next Up-Slope Panel

If the building has multiple panels per slope, install the next panel up-slope in a similar manner as the down-slope panel.

- **Orient the Panel**

Be sure the panel is correctly turned so the purlin bearing leg is away from the rake.

- **Align the Panel End**

Position the panel so the down-slope end laps over the previously installed panel. Align the panel end 1" below the down-slope edge of the purlin's top flange.

- **Align the Panel Sidelap**

Position the panel so its rib laps over the rib of the previously installed panel.

Check that the rib is fully nested and in contact with the sidelap sealant along the full length of the panel.

- **Install Fasteners at Sidelap**

To hold the sidelap in position, installing the fasteners at each end of the panel first. Do not install a fastener within 12" of the panel's up-slope end at this time.

Install the sidelap fasteners in the center of the rib at the spacing shown.

- **Install Fasteners at Structurals**

Fasten the panel to the purlins in the same manner as the down-slope panel (except the uppermost purlin).

At the endlap, position the fasteners at the center of the purlin top flange and place at the spacings shown.

Position the fasteners at the center of the purlin top flange and at the spacings shown.

Caution: Do not fasten the panel to the upper most purlin at this time.

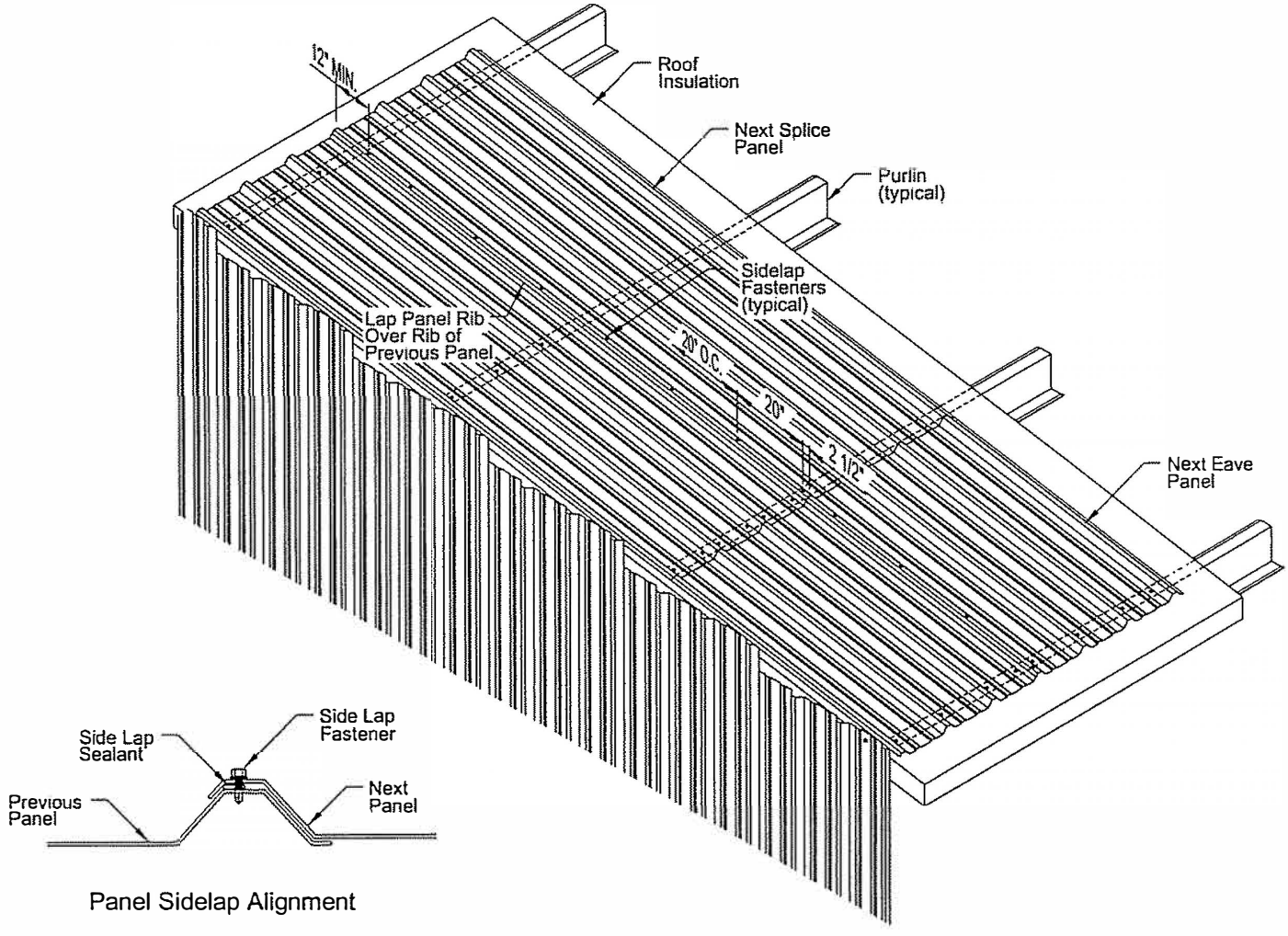

Panel Sidelap Alignment

Install Next Splice Panel

11.18 Install Tape Sealant

- **Apply Sidelap Sealant**

Apply the sidelap sealant in the same manner as the previous panel. Extend the sealant to lap 1/2" over the sidelap sealant on the down-slope panel.

- **Apply Endlap Sealant**

Apply the endlap sealant in the same manner as on the previous panel. Align the sealant with the endlap sealant on the adjacent panel.

- **Apply Endlap Pigtail Sealant**

Apply a strip of tape sealant along the up-slope top edge of the panel's rib.

Lap over the endlap sealant and extend the other end to the end of the panel.

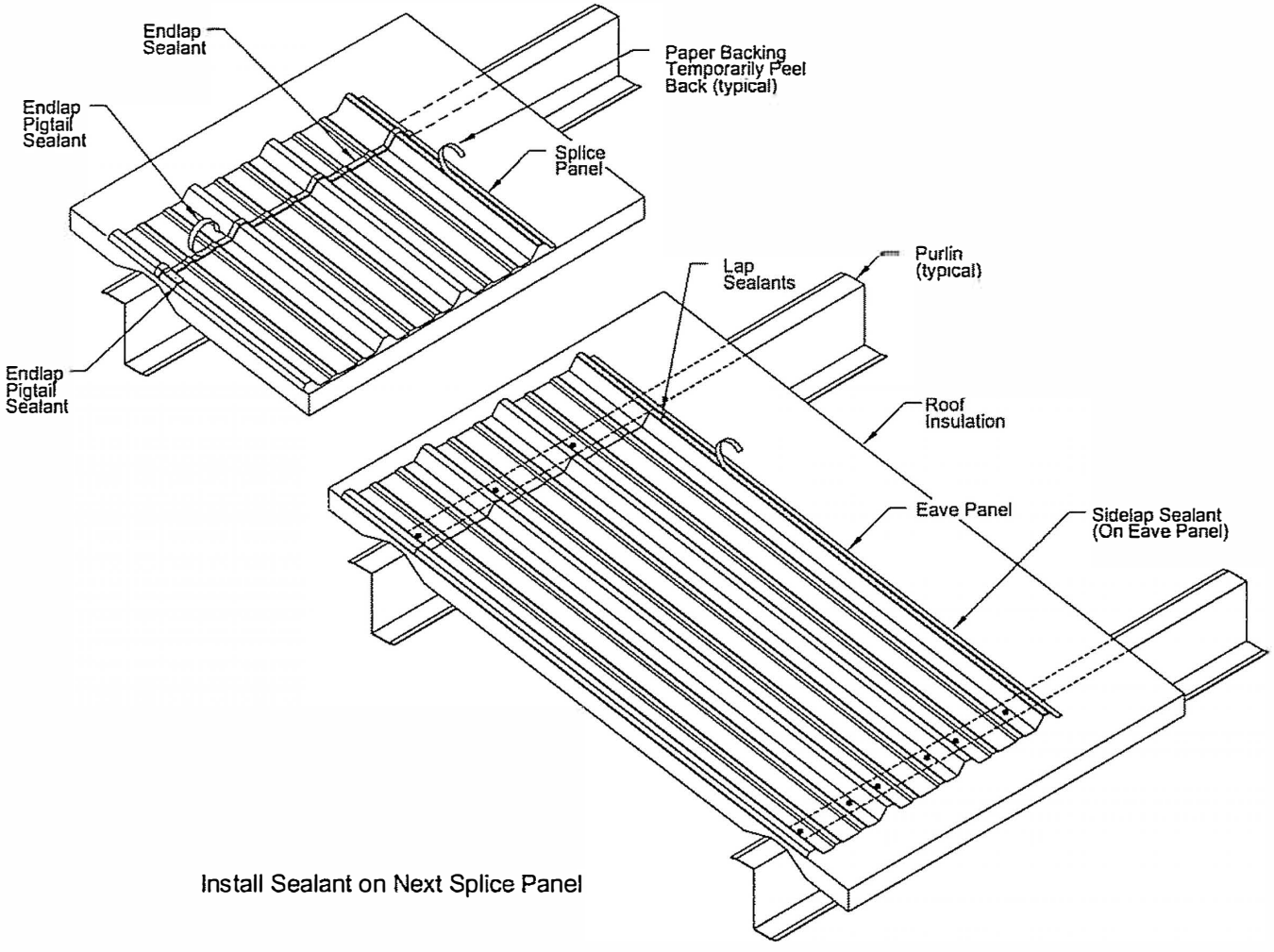

Install Sealant on Next Splice Panel

11.19 Install Ridge Cap

- **Apply Sidelap Sealant**

Apply tape sealant along the top edge of the previously installed ridge cap's outer most rib. Extend the sealant on both sides to lap ½" over the roof panel sidelap sealant.

- **Orient the Ridge Cap**

If the ridge cap has a purlin bearing leg, position it away from the rake.

- **Position the Ridge Cap**

Position the ridge cap so its peak is centered between the ridge purlins and its ends to lap over the roof panels.

Align the ridge cap's trailing edge to lap over the rib of the previously installed ridge cap. Check that the rib is fully nested and in contact with the sidelap sealant.

Check that the ridge cap ends fully nest over the installed panels and fully contact the endlap sealant.

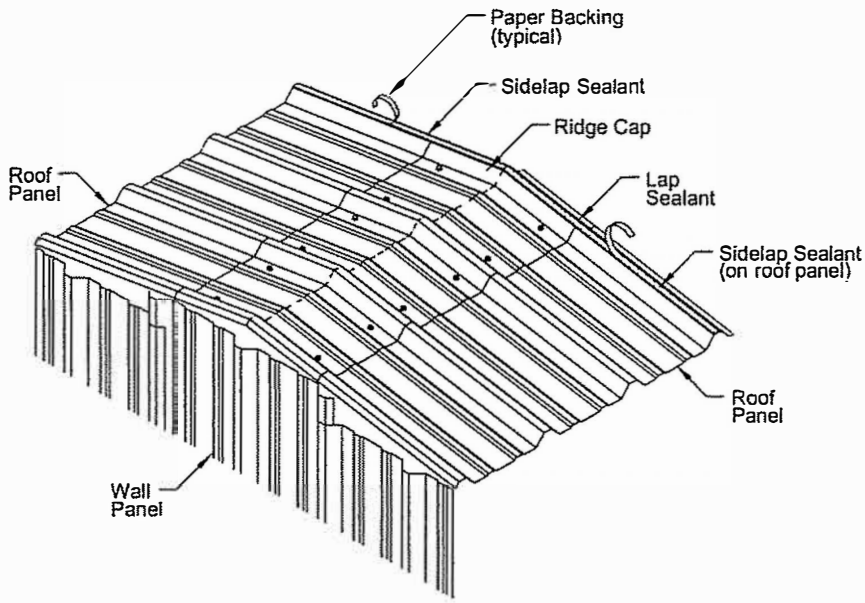

Applying Sidelap Sealant

- **Install Sidelap Fasteners**

Install sidelap fasteners at 2 1/2" from the ends and from the center on both sides. Position the fasteners at the center of the rib.

- **Install Structural Fasteners**

Install the ridge cap structural fasteners in the same manner and at the same spacing as the previously installed ridge cap.

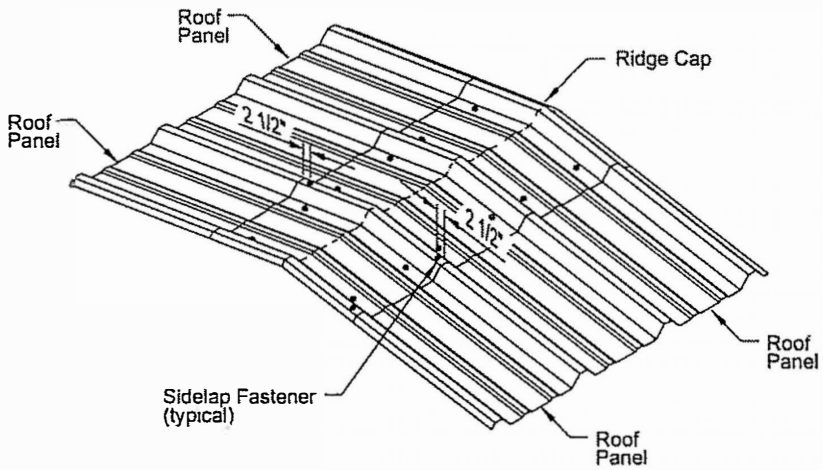

Installing Ridge Cap

11.20 Check Panel Coverage

• Coverage Check Points

At the eave, endlaps, and ridge, check the accumulated panel coverage and correct as necessary.

• Attach Measuring Tapes

Clamp the end of the measuring tape to the panel rib nearest the rake. Clamp the tape so the zero dimension is at the center of the panel rib.

• Check Each Panel Run

Stretch the tape taut and measure the center of the last rib on the last installed panel.

• Correct Panel Coverage

The correct coverage is 3'-0" (36") per panel run. This is measured from center to center of the outside ribs on each panel.

Caution: Sweep the roof clean of all debris, drill chips, extra fasteners, etc., to prevent rust stains and potential corrosion of the roof panels.

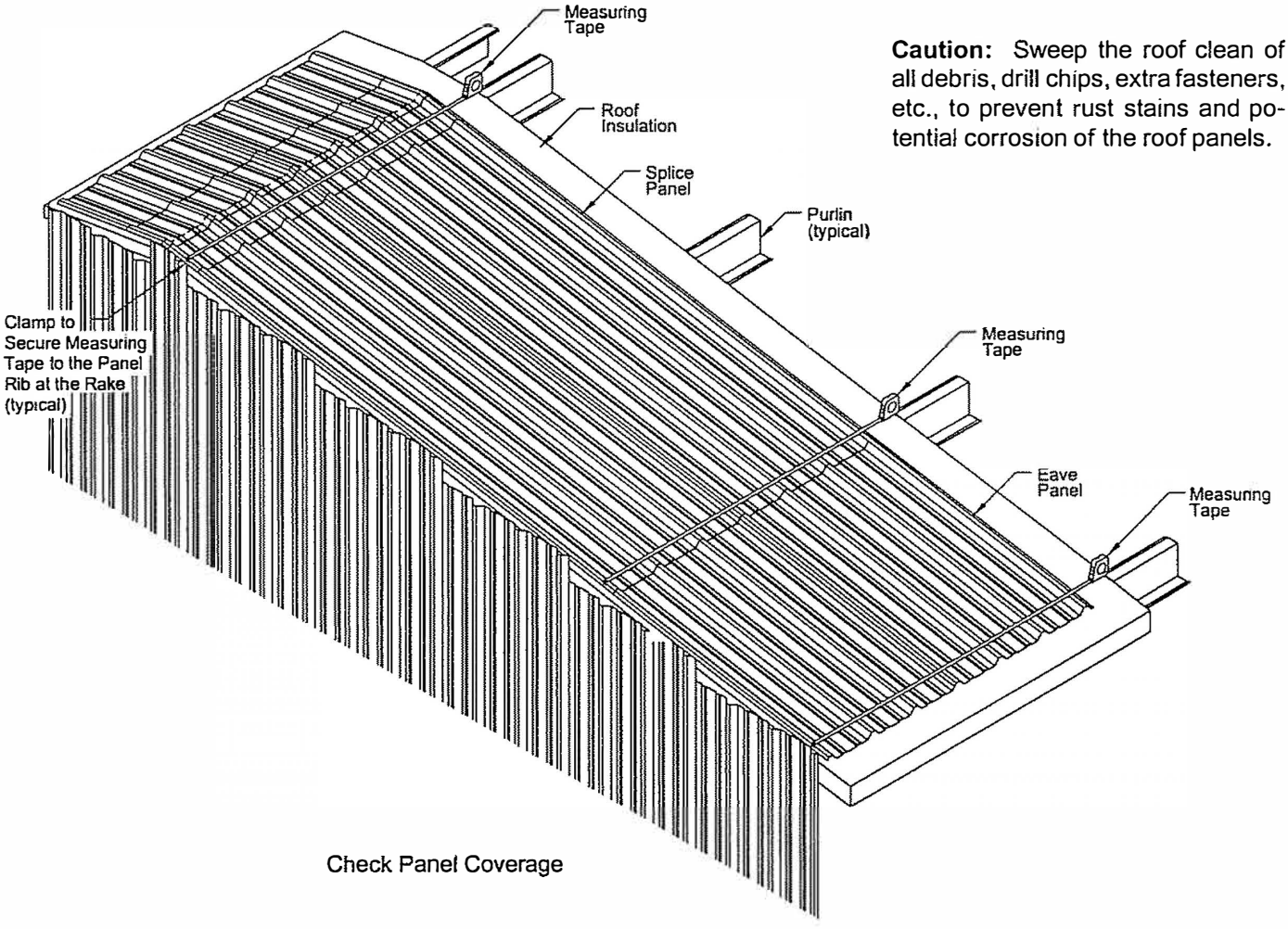

Check Panel Coverage

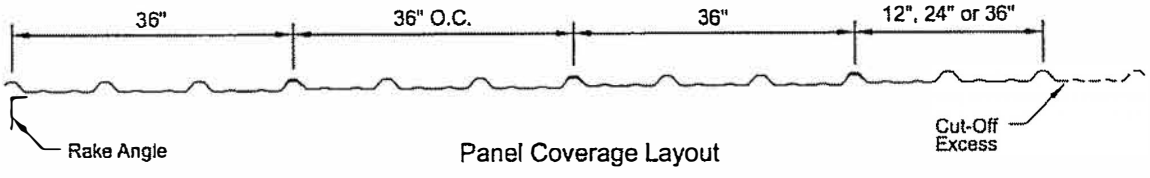

Panel Coverage Layout

11.21 Complete Panel Installation

Complete installation of the remaining roof panels and ridge caps following the previously stated procedures.

At the finish rake, if the panel coverage exceeds the building length, cut off the excess width of the roof panels and ridge cap.

12.0 PERIMETER TRIM INSTALLATION

12.1 Installation Sequence

• Eave Trim Wall Closures (Optional)

The eave trim was installed prior to roof sheeting (refer to Section 11.2). If wall closures are required, they must be installed prior to gutter installation.

• Eave Gutter

The eave gutter is installed after the roof sheeting is completed and is normally installed prior to installing rake trim.

• Rake Trim

The rake trim is installed after the roof sheeting is completed and is normally installed prior to installing eave gutter.

The peak box is installed with the rake trim. Corner boxes must be installed after both eave gutter and rake trim are installed.

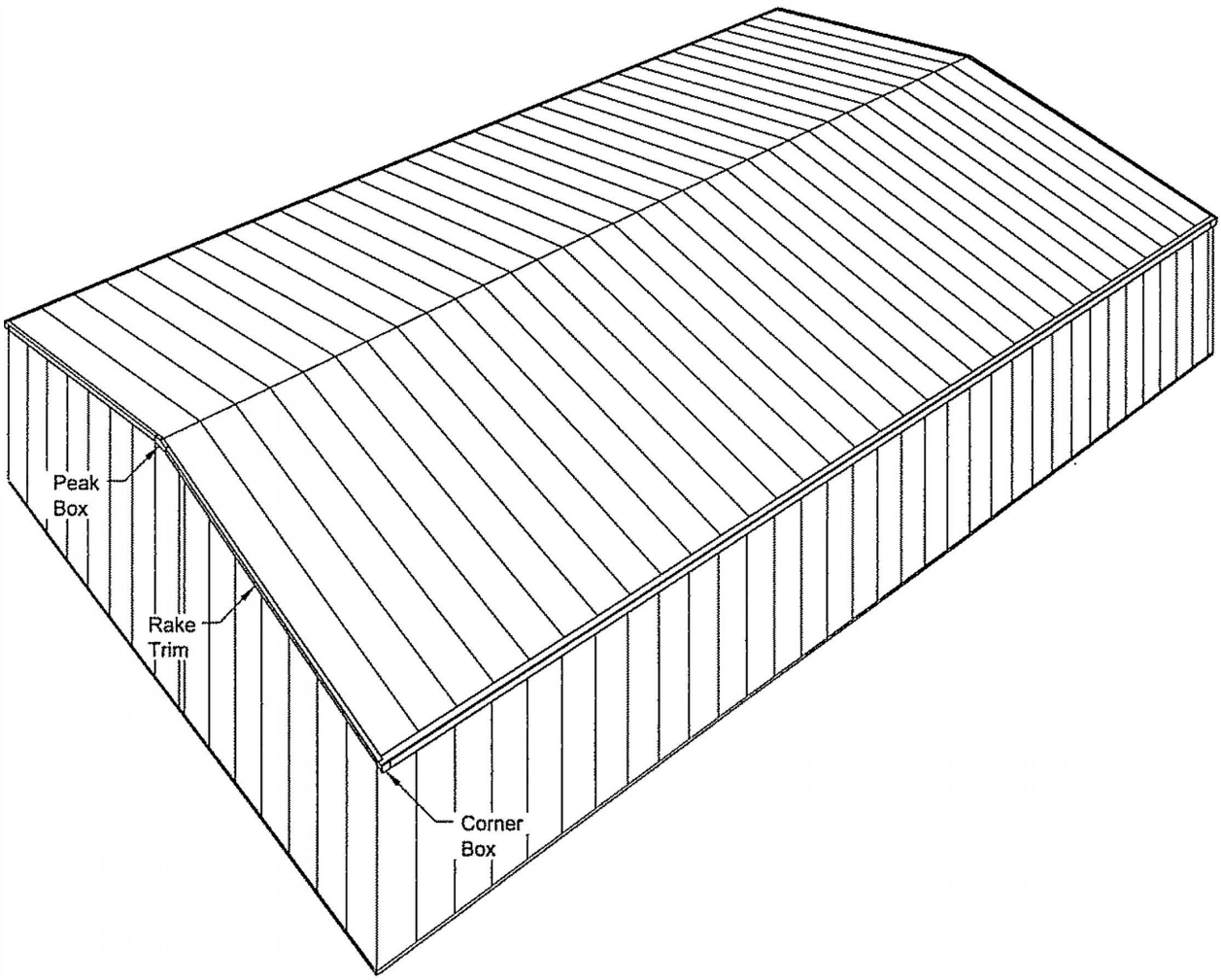

Perimeter Trim

12.2 Install the Eave Trim Closures (If Req'd)

• Install Closure Strips

If the building is provided with closure strips along the eave, position the closure strips between the eave trim and the wall panel.

• Closure Strip Alignment

Align the bottom edge of the closure strips 1/4" above the bottom edge of the eave trim.

Note: It may be helpful to secure the closure strips to the wall panels with insulation retaining strips (not provided by Alliance).

• Fasten Bottom of Eave Trim

Attach the bottom edge of the eave trim to the wall panel's high ribs with wall sidelap fasteners. Be sure the fasteners penetrate the center of the closure strips.

Caution: If the eave trim is a different color than the wall panel, be sure to use fasteners that are the same color as the eave trim.

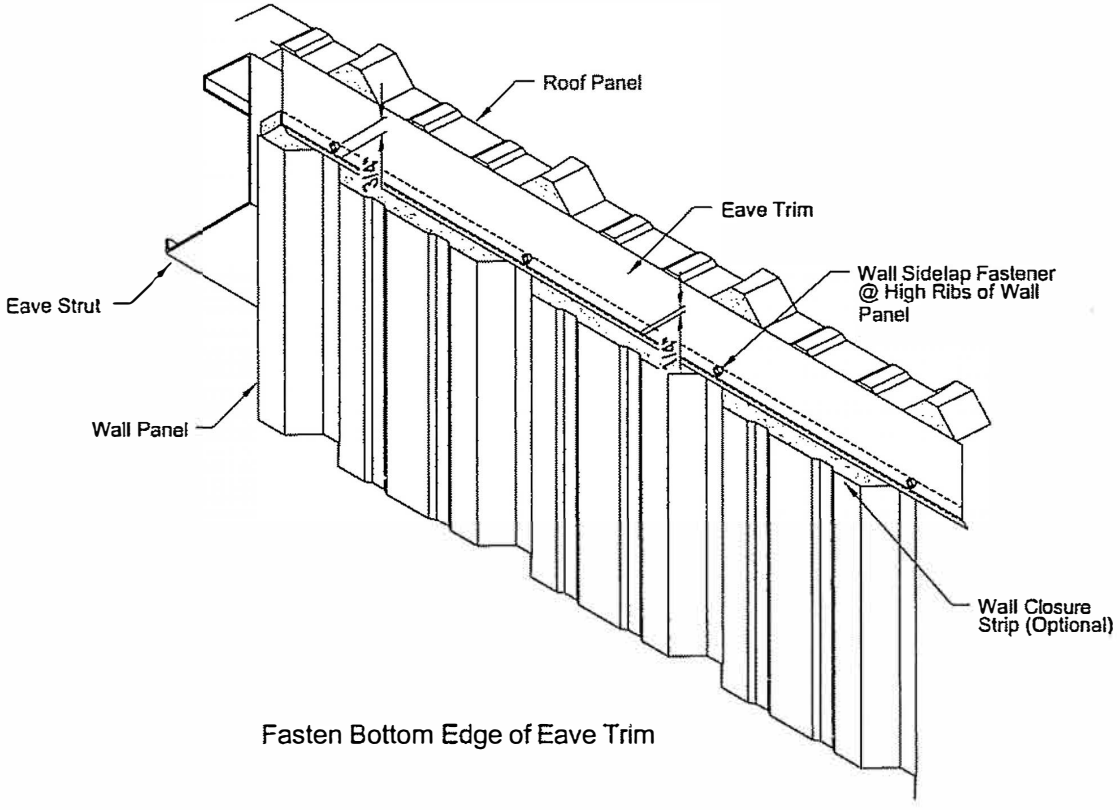

Fasten Bottom Edge of Eave Trim

12.3 Install the Eave Gutter

• Gutter Pre-Assembly

To assure watertight splices, the entire gutter is preassembled the lifted and attached as a single unit. For extra long buildings, preassemble into the longest sections that can be safely lifted into place.

It is recommended that there be one lifter for every 10' of gutter.

Use field measurements to confirm exact gutter length requirements and downspout locations.

• Assemble Gutter Splices

At the joint of one gutter section, field notch the top flange to clear a 2" lap of the gutter ends.

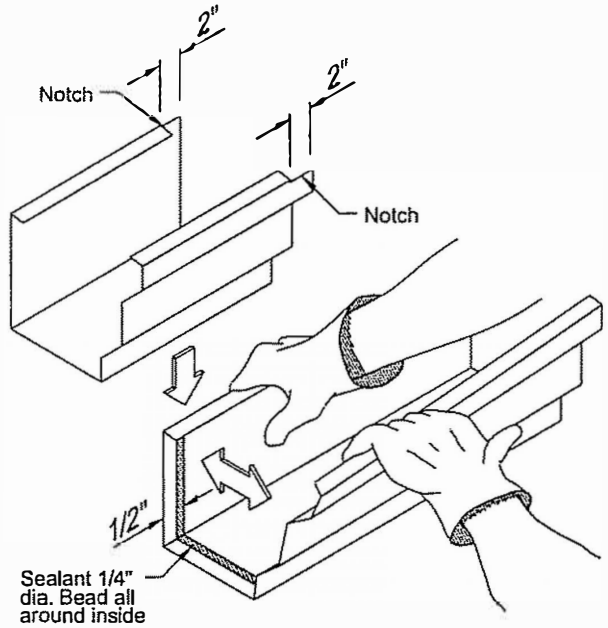

At the end of the opposite gutter section, apply sealant 1/2" from the end around the inside.

Spread the gutter end to accept the notched end of the opposite section. Nest the gutter ends together and secure with trim fasteners.

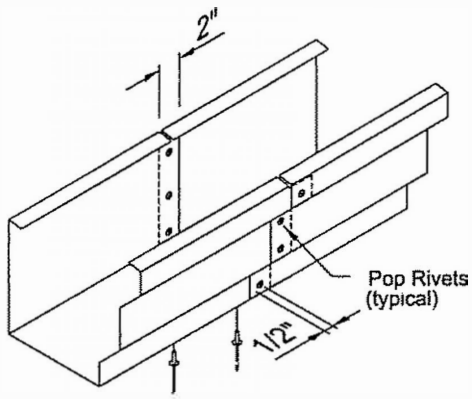

• Gutter End Alignment

Set the gutter ends flush with the face of the endwall panels. The last section of gutter may require field cutting to the required length.

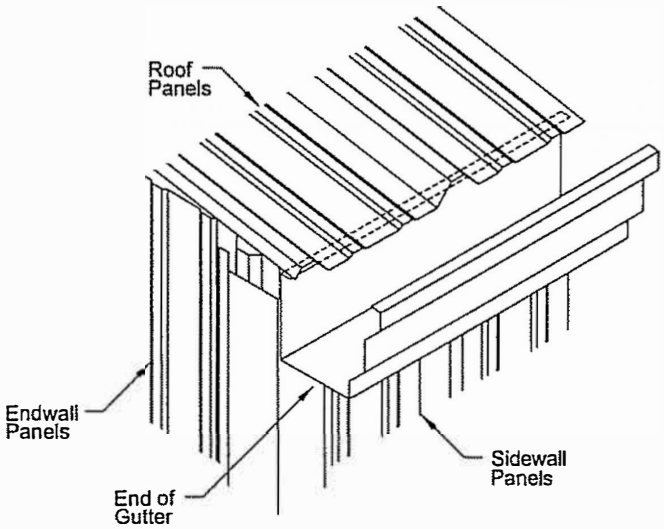

• Install Gutter End Caps

At the ends of the gutter assembly, field notch the gutter's back flange to clear the end cap. Apply sealant around the inside and spread the gutter end to accept the end cap.

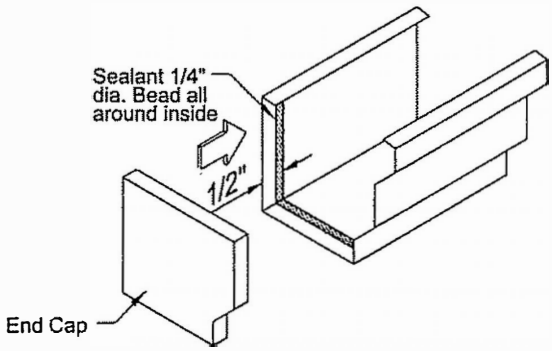

Position the end cap flush with the end of the gutter and secure with 1/8" diameter rivets.

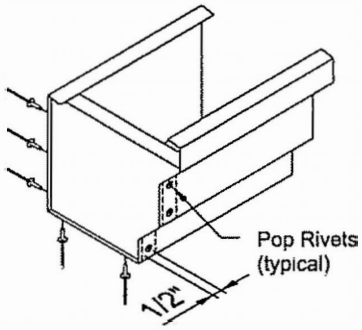

• Layout Downspout Outlets
Using a downspout section as a template, layout the downspout locations and attachment tabs on the bottom of the gutter assembly.

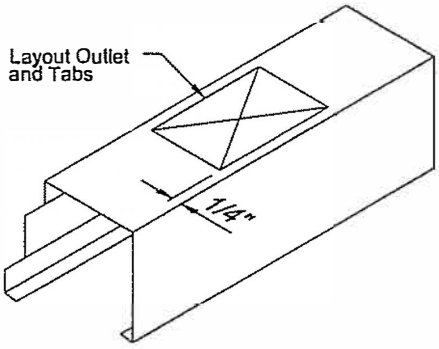

• Cut and Bend Downspout Tabs
Cut the tab lines in the gutter bottom and bend up the tabs for downspout attachment.

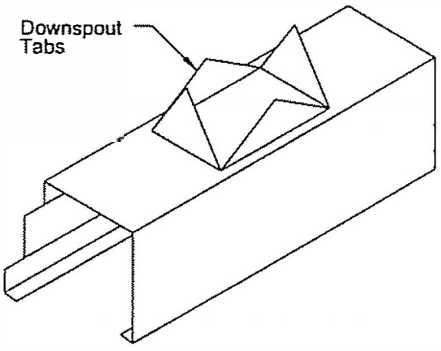

• Position the Gutter Assembly
With a man at each 10' spacing, lift the gutter assembly into position.

Align the gutter ends with the outside face of the endwall panels and push the back of the gutter flush against the eave trim.

Clamp the gutter's back flange to the roof panel at a minimum of 10' on centers.

• Fasten the Gutter
Secure the roof panel to the gutter's back flange with roof sidelap fasteners.

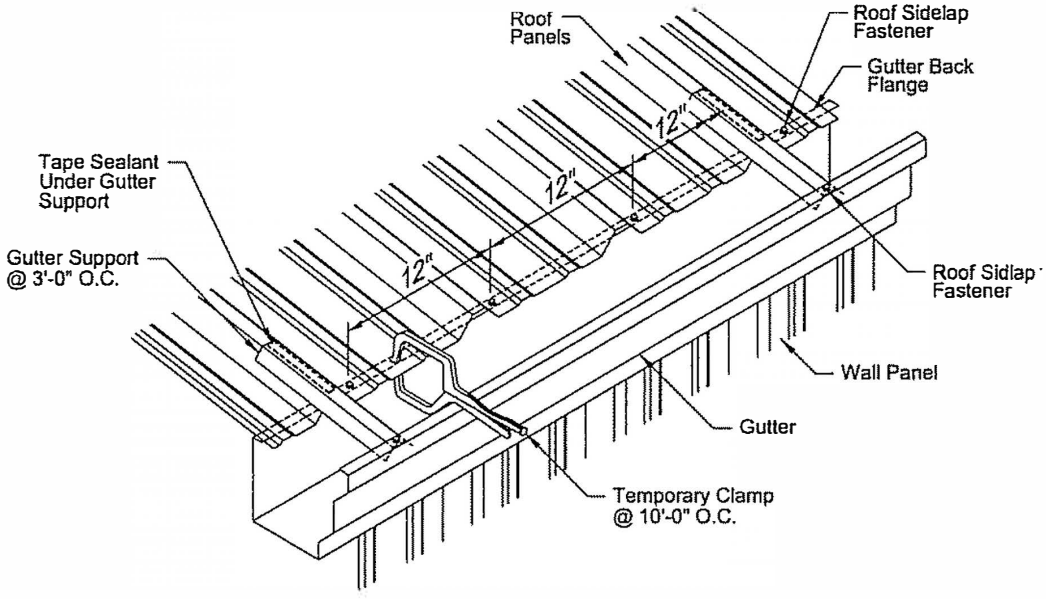

• Install Gutter Support Sealant
Apply a strip of tape sealant along the underside of each gutter support.

Caution: Do not fasten the gutter supports to the roof panels until after the gutter's outer face has been aligned.

• Install Gutter Supports
Align a gutter support with every third roof panel high rib and slide the end without sealant of the gutter support under the gutter's outer flange.

Secure the gutter flange to the support with a roof sidelap fastener.

• Align Gutter Face
Assemble a string line to extend between the gutter ends. Align the string 1/2" from the outside face of the gutter at the end caps.

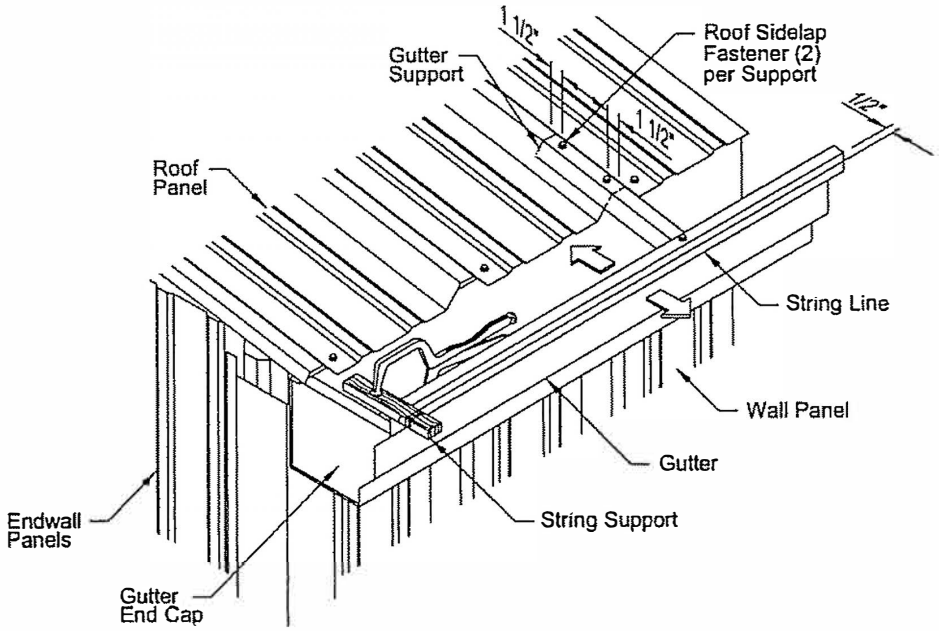

• Fasten the Gutter Supports
At each gutter support location, align the gutter 1/2" back from the string line.

When the gutter face is correctly aligned, secure the support to the roof panel's high rib with two roof sidelap fasteners.

12.4 Install Rake Trim

• Layout Rake Trim

Position a section of rake trim at the eave. Plumb the face of the trim and level the rake trim's top surface.

While holding the trim in place, mark the position of its top edge on the roof panel and the position of it's bottom edge on the wall panel.

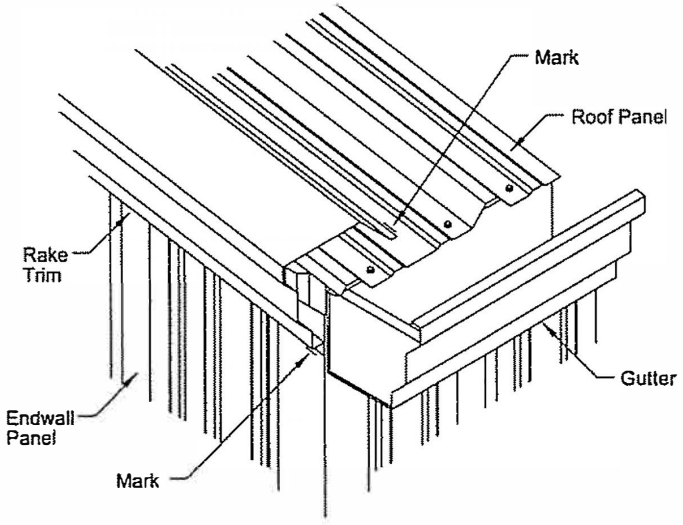

In the same manner, position the section of rake trim at the ridge and mark the position of it's top and bottom edges on the roof and wall panel.

• Chalk Line the Rake Trim Position

Snap chalk lines between the marks at the eave and ridge to mark the position if the rake trim edges on the roof panel and the wall panel's high ribs.

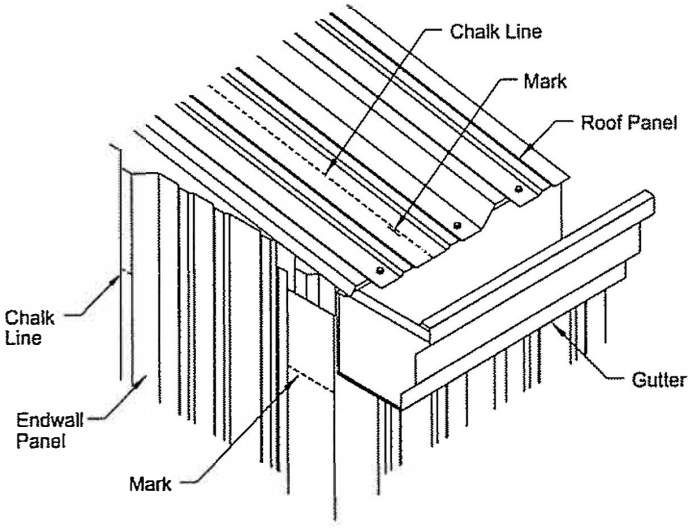

• Pre-Install Wall Closures

It may be helpful to pre-install the wall closures.

Use insulation retaining tape (not provided by Alliance) to secure the closure strips to the wall panels. Align the bottom edge of the closure 1/4" above the chalk marks.

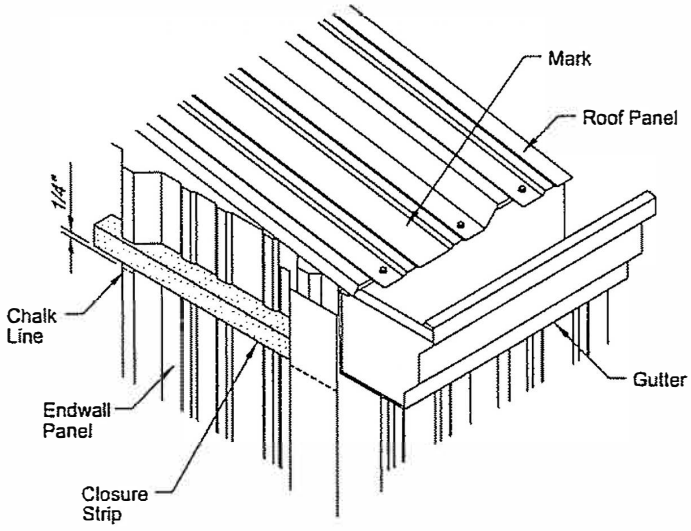

• Install Sealant

Apply tape sealant continuous along the roof panel just inside the chalk line where the rake trim will be placed.

Fully extend the sealant to the end of the roof panel on both sides of the building.

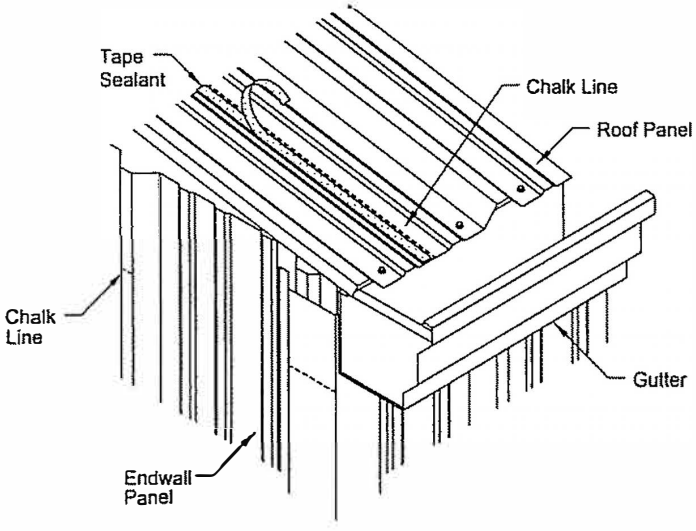

• Rake Trim End Alignment
The rake trim sections are installed starting at the eave and finishing at the ridge.

Align the end of the rake trim flush with the bottom corner of the gutter.

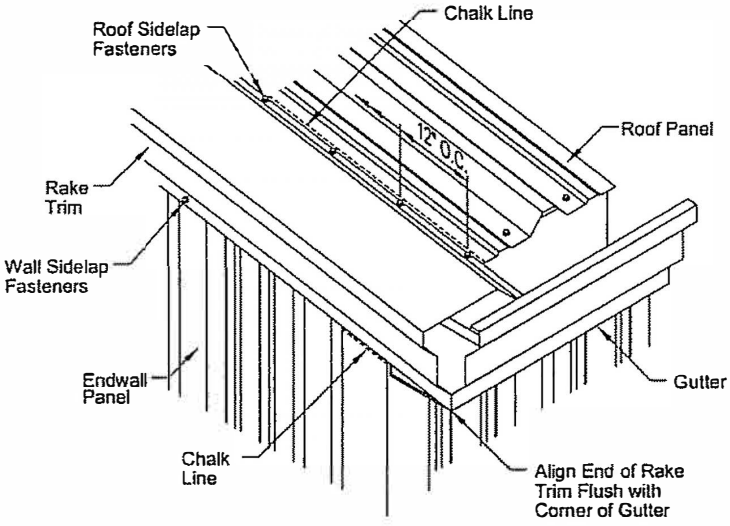

• Fasten the Rake Trim
Align the top edge of the rake trim flush with the chalk line on the roof panel. Check to be sure that the rake trim edge aligns with the sealant.

Secure the rake trim to the roof panel with roof sidelap fasteners at 1'-0 on centers.

Align the bottom edge of the rake trim with the chalk marks on the wall panels and secure the rake trim bottom edge to the wall panels with wall sidelap fasteners at each high rib.

• Assemble Rake Trim Splices
Apply sealant at the end of the installed rake trim.

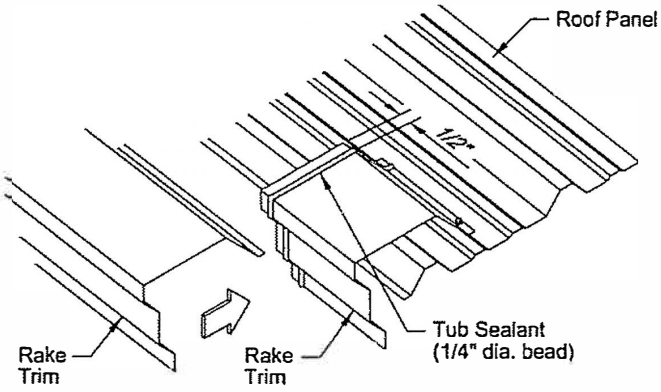

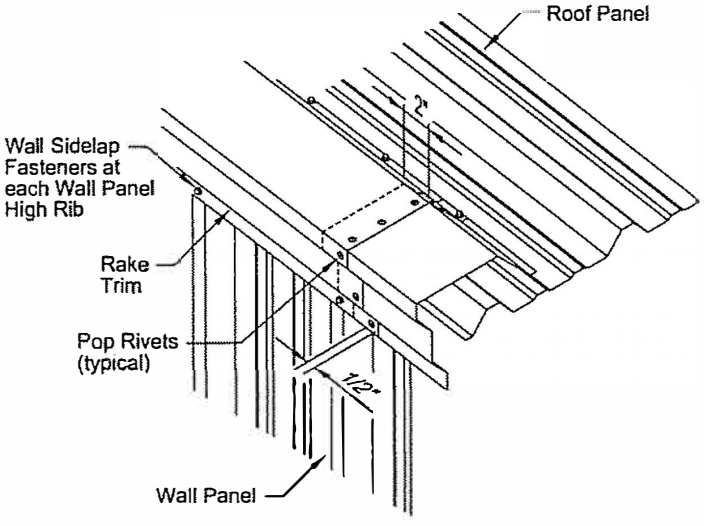

Align the end of the next rake trim section to lap 2" over the installed piece. Secure the lap with pop rivets.

• Miter and Tab Rake Trim at Ridge
At the ridge, field cut the rake trim to the required length allowing some overlap of the two ridge sections.

Field miter one piece of rake trim to be in a vertical plane with the wall panel. Tab the ends of both pieces to provide a weather tight fit.

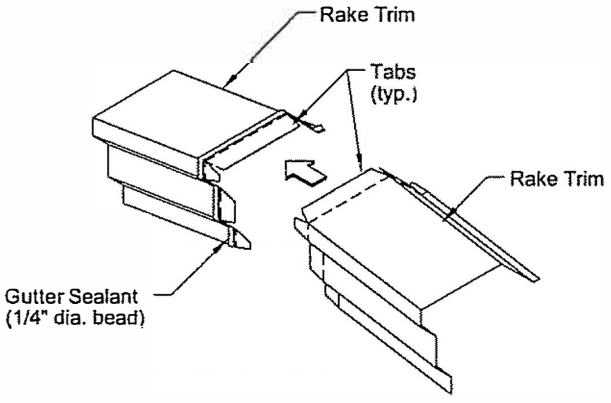

• Rake Trim Assembly at Ridge
Apply sealant at the end of one section of rake trim. Fit the opposing ends together and secure with pop rivets.

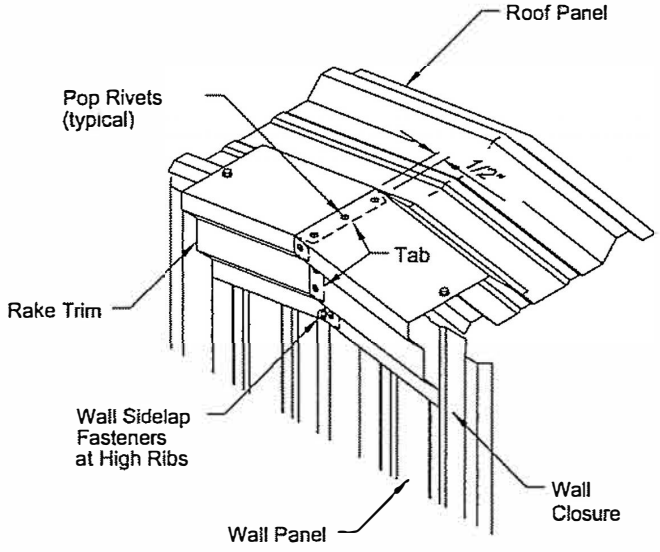

• Install Peak Sign
Position the peak sign on the face of the rake trim ridge assembly. Secure the peak sign with 1/8" diameter rivets.

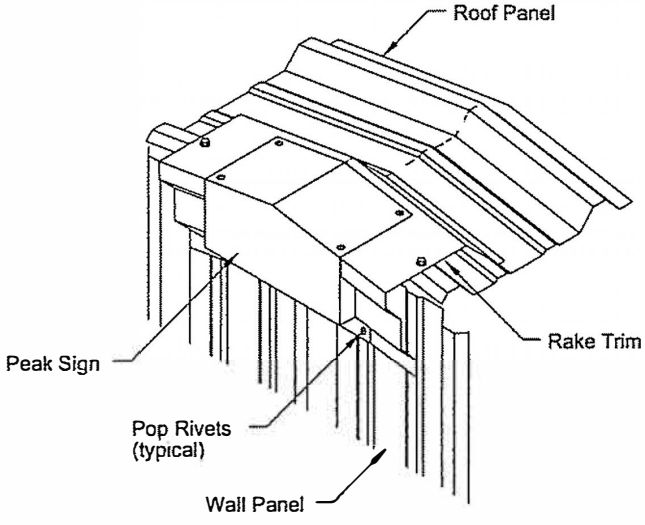

• Install Bird Stops (Optional)
If necessary, field fabricate and install bird stops to close the end of the rake trim and close the cavity between the rake trim and the gutter end cap.

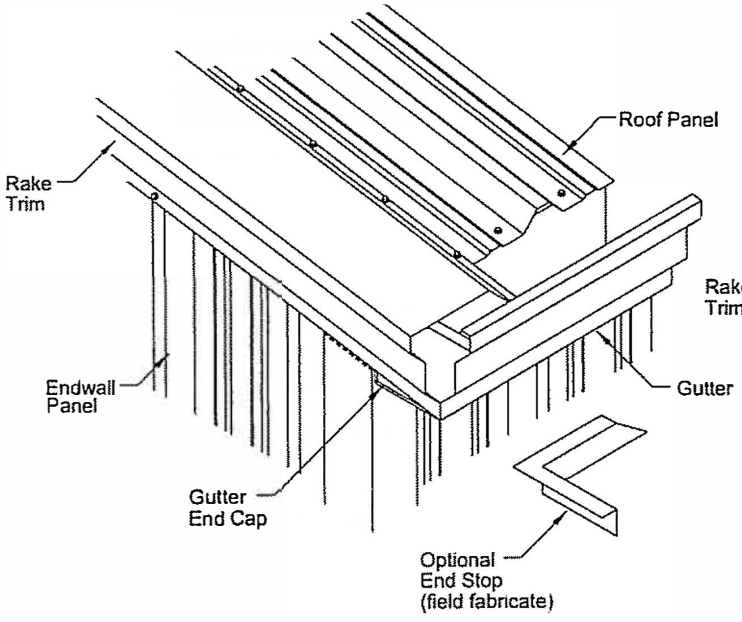

Secure the bird stop with 1/8" diameter rivets. From inside the gutter, seal the bird stop joints with caulk.

• Install Corner Boxes
Position corner boxes over the faces of the rake trim and gutter. Secure corner boxes with trim fasteners.

On the inside of the gutter, seal the fastener penetrations with caulk.

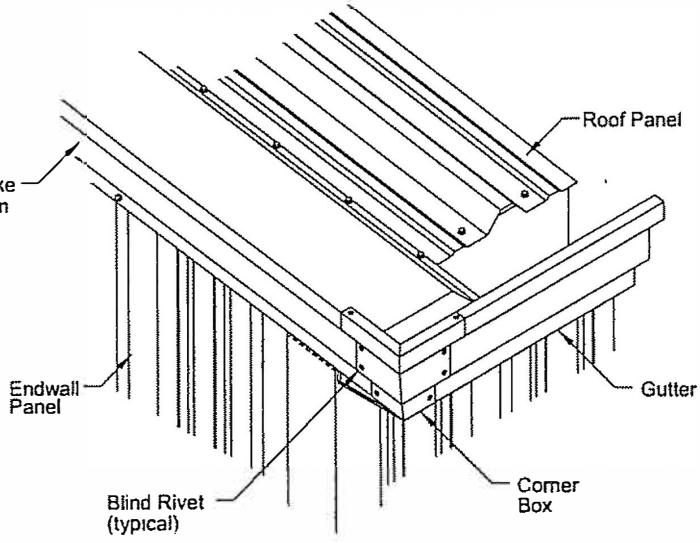

13.0 Wall Accessories

13.1 Framed Opening Types

Following are the typical framed opening types provided on Alliance buildings. Refer to the erection drawings for specific openings on your building project.

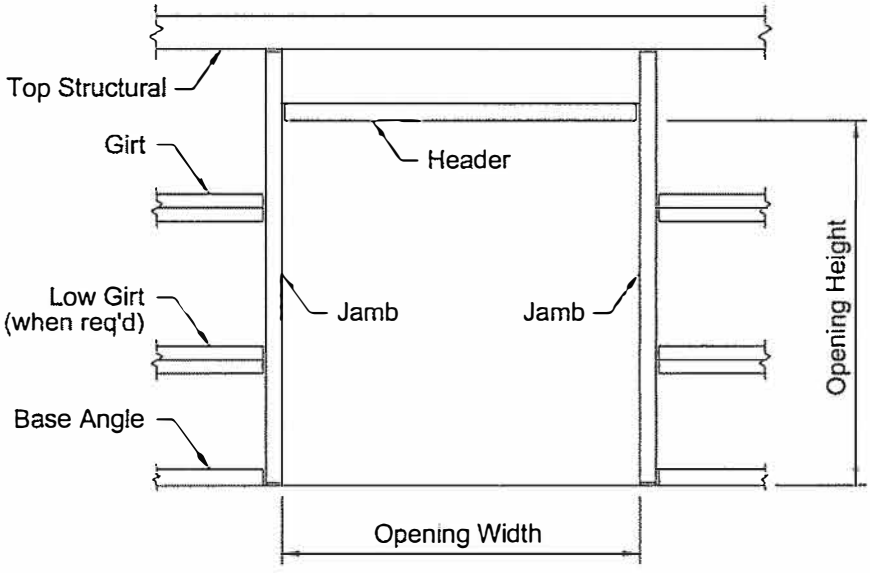

Overhead Door Framing

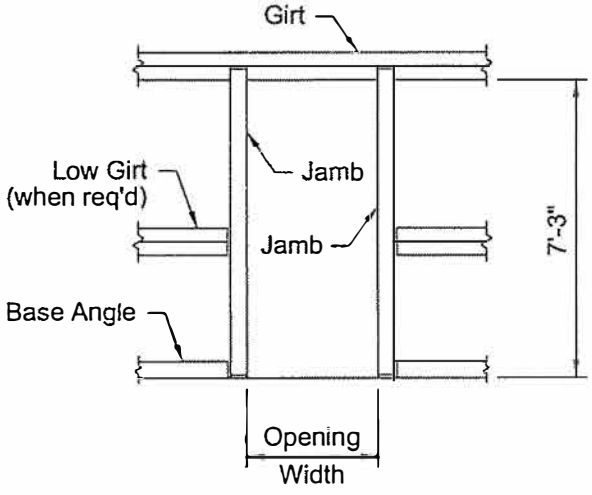

Walk Door Framing
(required only for buildings with low girts or interior liner panels)

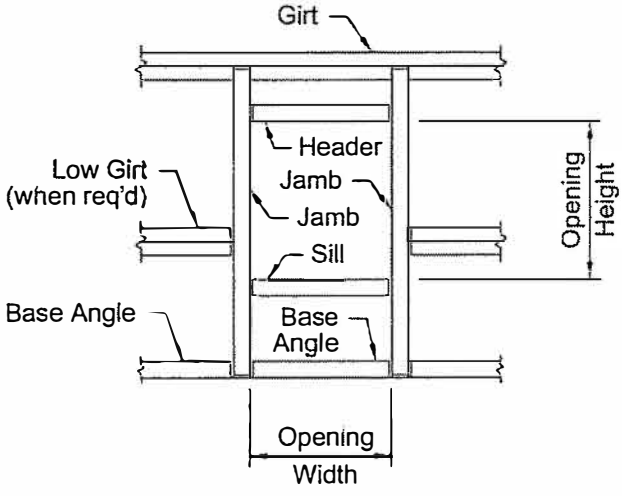

Window & Louver Framing

• Special Walk Door Framing Consideration

On buildings without low girts and without interior liner panels, the walk doors may not require framed openings. The walk door jambs serve the function of the framed opening jambs. In these instances, install the walk door frames in accordance with the instructions provided in the door package.

13.2 General

• Structural Framing

Framed openings are installed as part of the building's structural framing, prior to the installation of wall sheeting.

• Factory vs. Field Located

Framed openings may be specified as factory located or field located.

Factory located framed openings are specifically located on the erection drawings and the wall girts and some wall sheeting are factory cut to fit the openings.

Field located framed openings are located by the erector and the wall girts and all wall sheeting are field cut as required to fit the opening.

• Framed Opening Layouts

Always refer to the erection drawings for the specified locations and identification of the required parts and wall sheeting layout.

Following is the recommended erection sequence for a typical field located framed opening. The erection sequence for a factory located framed opening will be similar, except the wall girts and wall sheeting will not require field cutting.

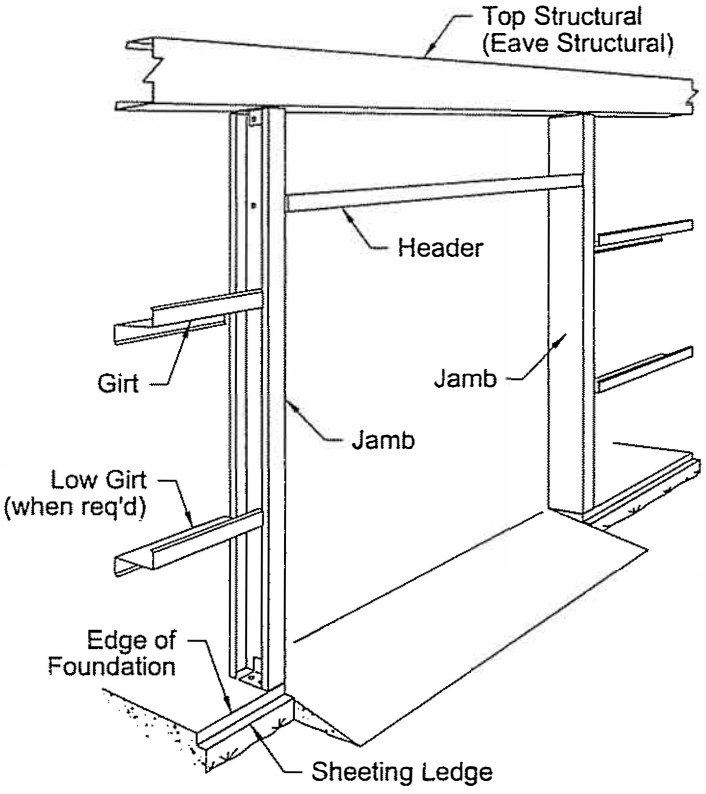

Typical Framed Opening
(overhead door framing shown)

13.3 Set Anchor Bolts

Anchor bolts for framed opening jambs may be cast into the building's foundation or may be field installed expansion bolts.

Set anchor bolts in accordance with the layout shown below.

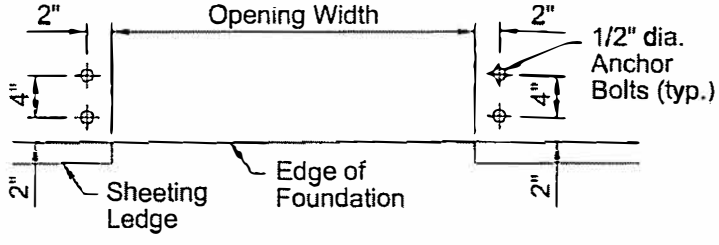

Anchor Bolt Layout

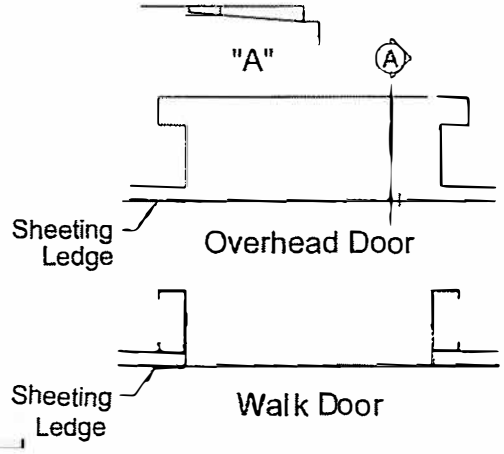

The anchor bolts cast into the foundation must have 1-1/2" minimum projection above the floor and the projection must be fully threaded.

As necessary for level and stable bearing of the jamb base, chip away foundation high spots and shim low spots.

13.4 Preparation of Jambs

• Field Located Header & Sill

Headers and sills for windows and louvers are normally field located. Other openings may have field located headers.

Field located headers and sills will require field drilled connection holes in the jambs.

• Pre-drill Jambs

It may be easier to pre-drill the jambs before they are erected.

Layout the header and sill positions on the jamb. Position the end of the header or sill against the face of the jamb and mark the hole locations using the end clip holes as the template. Field drill 5/8" diameter holes for the connection.

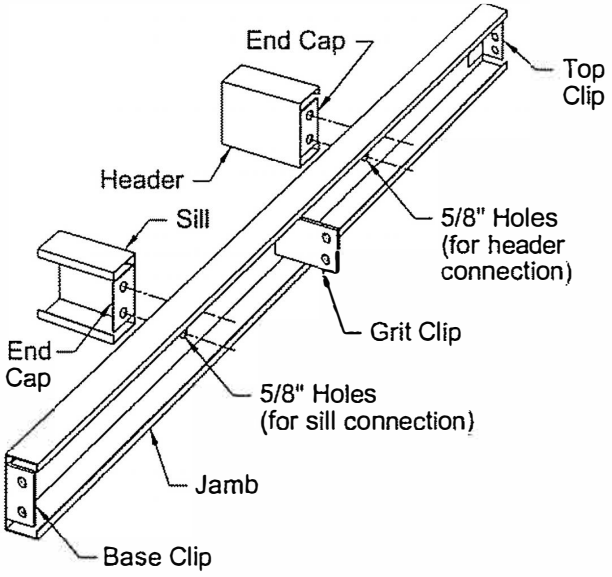

Typical Jamb Assembly

13.5 Erect the Framing

• Set the Jambs

Set the jambs so their base clips fit onto their respective anchor bolts. Install the anchor bolt nuts to secure the base clips to the foundation.

• Align the Jambs

Before tightening the anchor bolt nuts, align the face of the jamb flush with the edge of the foundation.

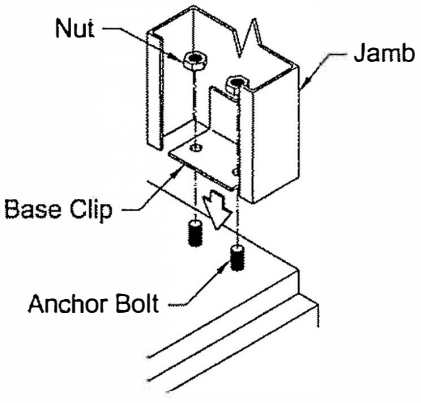

Setting the Jamb

• Plumb the Jambs

Using a minimum 4' level or a transit, plumb the jambs vertically. Set the face of the jambs flush with the face of the top structural (eave strut or end rafter).

• Attach Jambs to Top Structural

Using the holes in the jamb's top clip or holes as a guide, field drill 5/8" diameter holes into the top structural.

Install standard 1/2" diameter bolts and nuts to secure the jambs to the top structural.

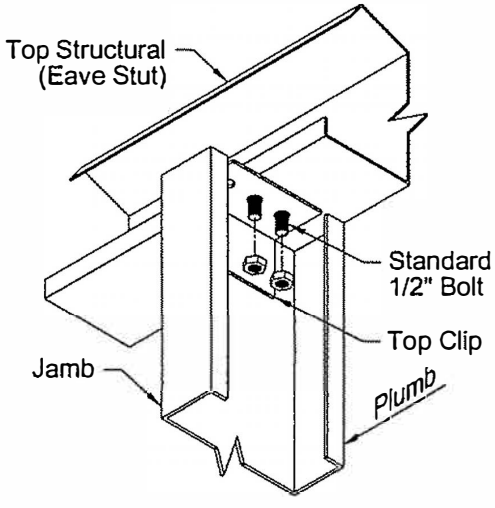

Attaching to Top Structural

• **Attach Header**
Set the header in position and secure each end to the jambs with standard 1/2" diameter bolts and nuts.

Before tightening, be sure the outside face of the header is flush with the outside face of the jamb.

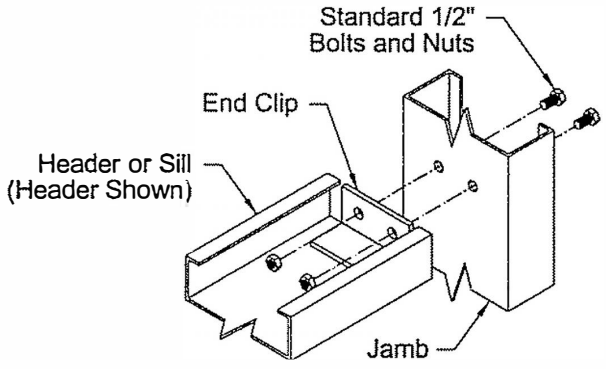

• **Attach the Girts**
Set the cut ends of the girt in position. Using the holes in the clip as a guide, field drill holes in the girt and secure to the girt clips with standard 1/2" diameter bolts and nuts.

Before tightening, be sure the outside face of the girt is flush with the outside face of the jamb.

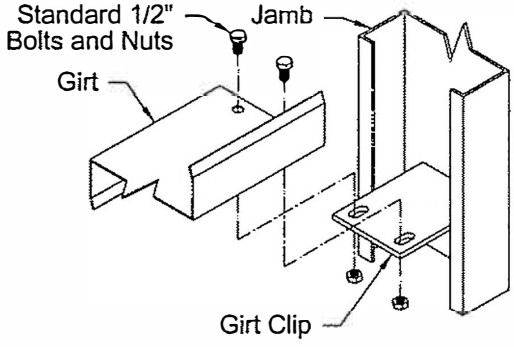

• **Cut Wall Girts**
As necessary, cut the girts to clear the framed opening jambs. Cut the respective girts in accordance with the layout shown below.

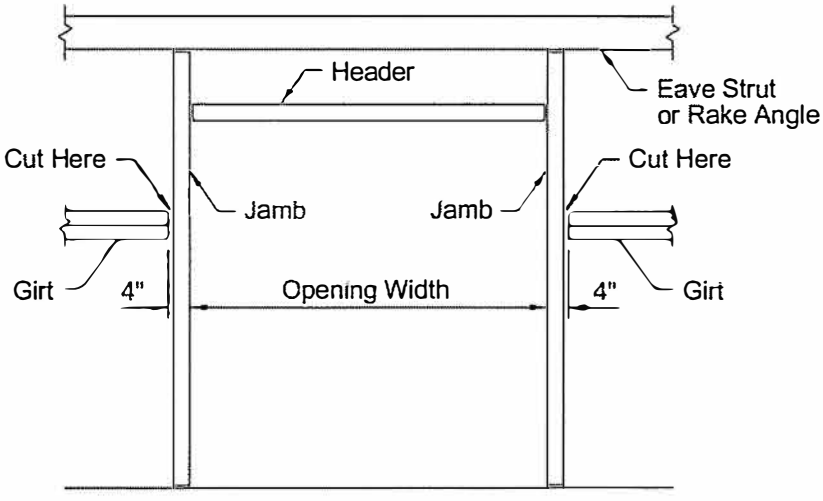

Girt Cutting Layout

13.6 Install Walk Door Framing

Refer to the erection drawings for the specific walk door framing requirements.

Assemble the walk doors in accordance with the instructions provided in the walk door package.

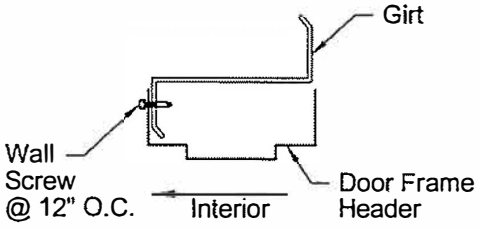

Door Header Attachment

The standard door frame header laps over the girt's interior flange. Secure the header to the girt with wall screws at 12" spacing.

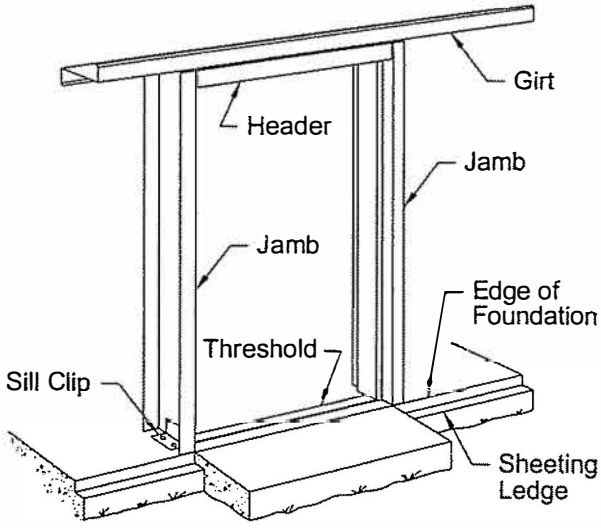

Typical Walk Door Frame

13.7 Install Cover Trim (Optional)

If jamb and header cover trim is provided for exposed overhead door framing, install the cover trim before the wall sheeting is installed.

Secure the cover trim to the interior flange of the jambs and header with wall screws on 24" on centers.

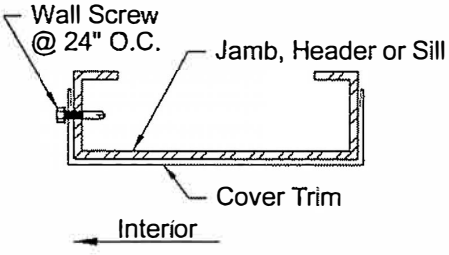

Cover Trim Attachment

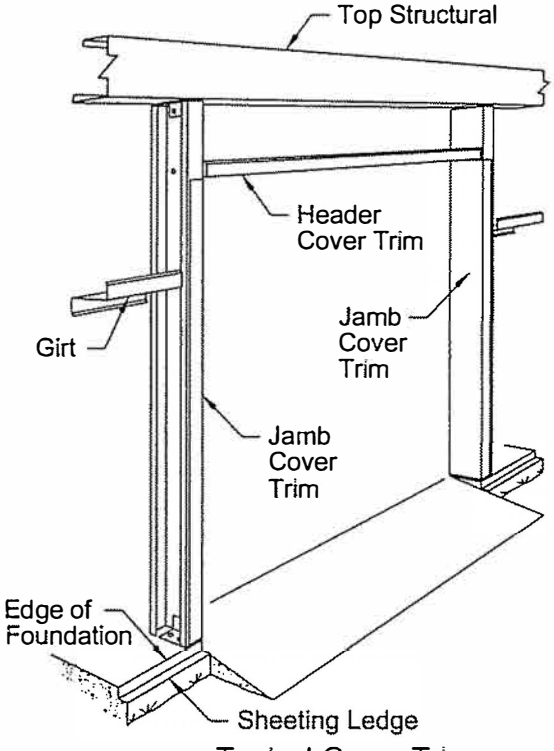

Typical Cover Trim
(overhead door opening shown)

13.8 Framed Opening Sheeting and Trim

• Install Header Trim

Position the long leg of the header trim on the face of the header.

Align the header trim so its ends project 1-1/2" beyond the edge of the opening. If necessary, field cut the header trim to the required length.

Align the bottom edge of the header trim flush with the bottom edge of the header.

Secure the header trim to the header with 1/8" diameter rivets. Position the rivets 12" from each end of the header trim and at minimum 5' spacing between.

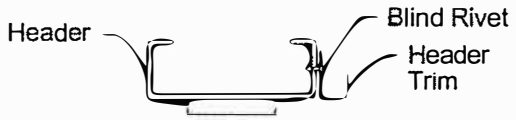

Header Trim Attachment

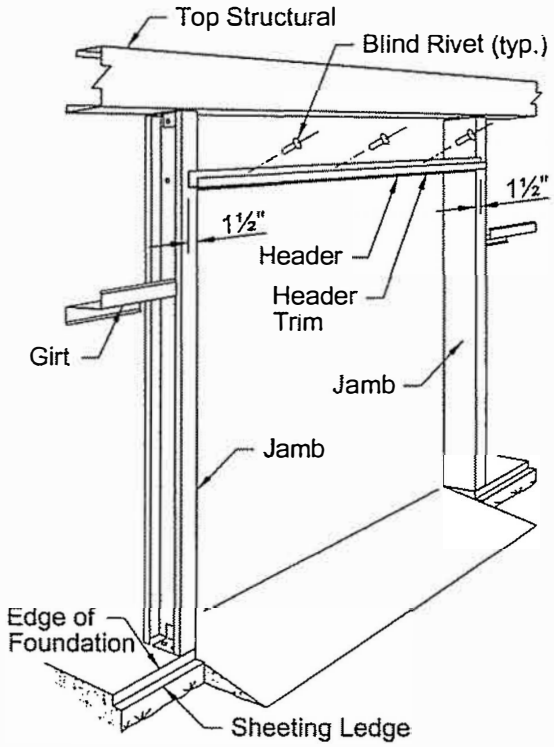

Installing Header Trim
(framed opening shown, walk door is similar)

Caution: On swing out walk doors, position the header trim 1/8" above the edge of the header to assure swing clearance for the door leaf.

• Cut the Wall Panels

Cut the wall panels to clear the opening. Cut the wall panel 1/8" back from the edge of the opening to assure that the wall panel edges do not project into the opening.

• Cut Header Trim Slit

At each end of the header, slit the wall panels to fit the projecting end of the header trim. Carefully cut this slit to just clear the horizontal web of the header.

• Install Wall Panels

Install the wall panels on either side and above the opening. Attach the panels to the base angle, top structural, header and girts in the normal manner.

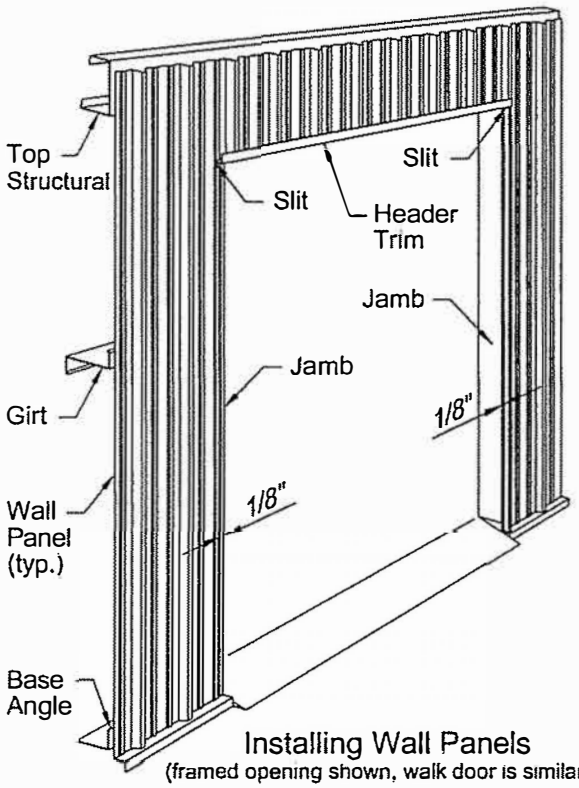

Installing Wall Panels
(framed opening shown, walk door is similar)

• **Install Jamb Trim**
Position the long leg of the jamb trim between the face of the jamb and the wall panel.

Align the ends of the jamb trim flush with the bottom edge of the wall panel. If necessary, field cut the jamb trim the required length.

Align the edge of the jamb trim flush with the edge of the jamb.

• **Install Wall Fasteners**
Secure the edge of the wall panels and jamb trim to the exterior flanges of the jambs with wall screws at 12" on centers.

Secure the edge of the wall panels and header trim to the exterior flange of the header with wall screws at 5"/7"/5" on center.

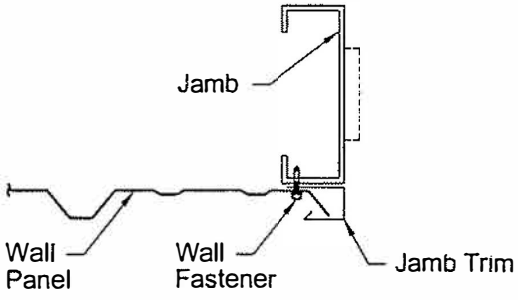

Jamb Assembly

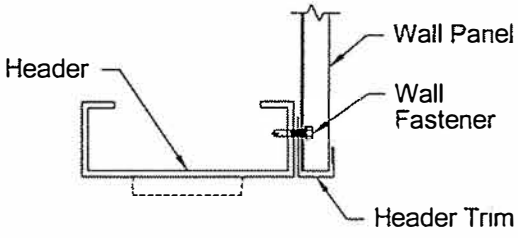

Header Assembly

• **Seal the Header Trim**
To prevent water infiltration into the building, sealant may be applied at the ends of the header trim, between the trim's vertical leg and the wall panel, and also to the perimeter of the wall panel slit.

Caution: Do not seal the header trim in a manner that will prevent drainage of the wall panel sidelaps into the header trim and do not restrict drainage from the header trim ends.

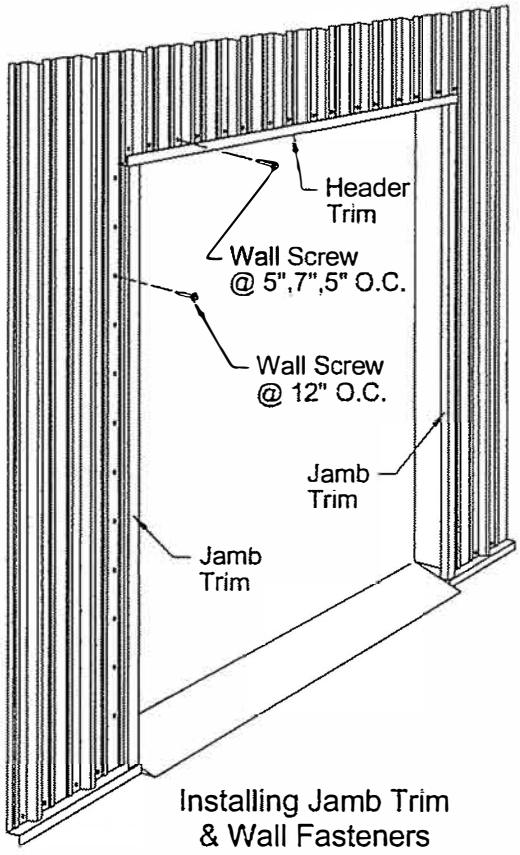

Installing Jamb Trim & Wall Fasteners

13.9 Window and Louver Sheeting

• Self Flashing

The standard windows and louvers are self flashing and do not require separate trim.

• Erection Sequence

The window and louvers should be installed as the wall sheeting progresses.

Before installing the window or louver, install the wall panels on one side and below the opening.

• Cut Wall Panels

Cut the wall panels to clear the opening. Cut the wall panel 1/8" back from the edge of the opening to assure that the wall panel edges do not project into the opening.

• Cut Header Trim Slit

Slit the wall panels to fit the projecting end of the window header. Carefully cut this slit to just clear the horizontal web of the window header.

• Install Wall Panels

Install the wall panels on one side and below the opening.

Attach the panels to the base angle, top structural and girts in the normal manner.

Caution: Do not attach the wall panels to the jambs, header or sill until after the window or louver is installed.

• Install Window or Louver

Refer to the erection drawings for the specific window and louver requirements.

Assemble the window or louver in accordance with the instructions provided in the window and louver packages.

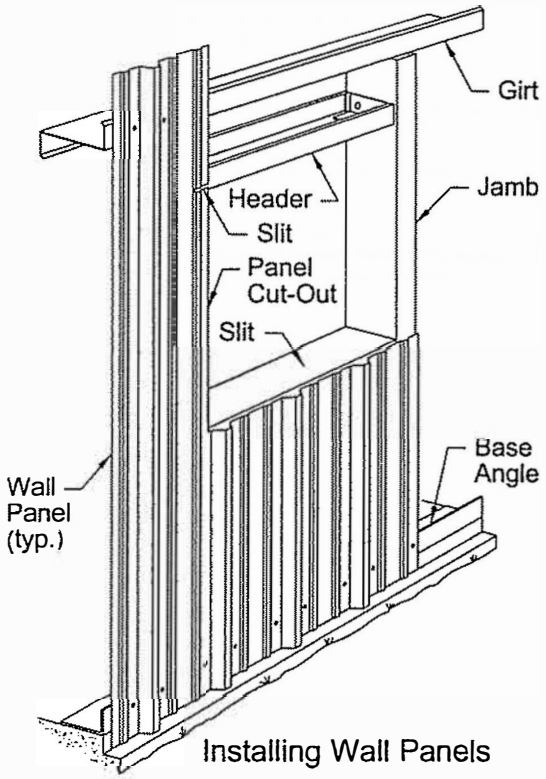

Installing Wall Panels

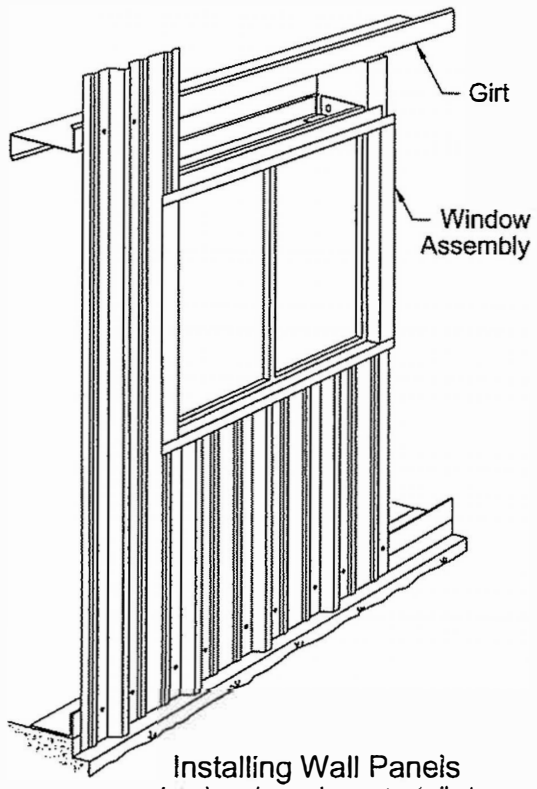

Installing Wall Panels
(window shown, louver is similar)

• **Complete the Sheeting**
Install the wall panels above and on the other side of the window or louver.

• **Install Wall Fasteners**

Secure the wall panels to the window or louver header flange with wall screws at 5"-7"-5" on centers.

Secure the wall panels to the window or louver sill flange with wall screws at 5"-7"-5" on centers.

• **Seal the Header Trim**
To prevent water infiltration into the building, sealant may be applied at the ends of the window or louver header between the header's vertical leg and the wall panel, and also seal the perimeter of the wall panel slit.

Caution: Do not seal the header in a manner that will prevent drainage of the wall panel sidelaps into the header and do not restrict drainage from the header ends.

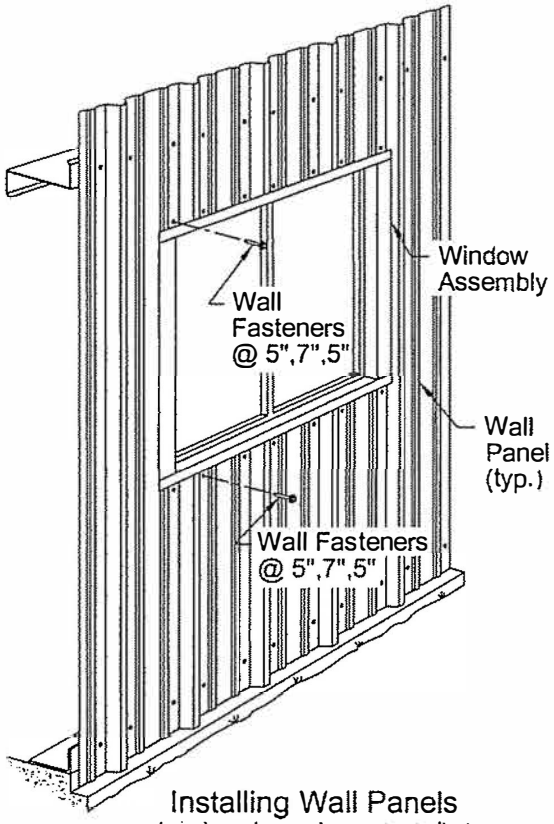

Installing Wall Panels
(window shown, louver is similar)

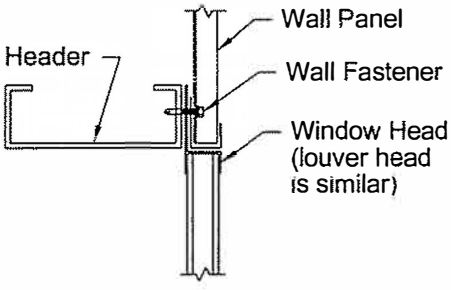

Header Assembly

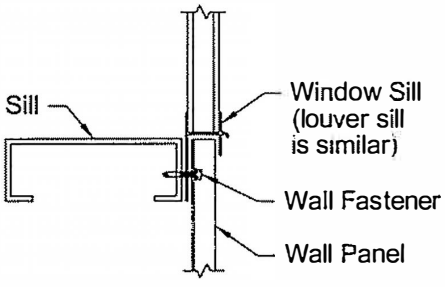

Sill Assembly

14.0 Roof Accessories

Ridge Ventilators

14.1 General

• Erection

The standard ridge ventilators are 10' long units which are installed over roof openings along the ridge.

• Continuous Ventilators

The ventilators may be joined together to form a continuous run.

• Ventilator Assembly

Refer to the ventilator manufacturers instructions (included with the ventilator) for ventilator assembly.

Caution: Check that the ventilators are assembled for the correct roof pitch.

• Omit Ridge Caps

To provide the opening for the ventilator, the ridge caps are omitted.

At the ends of the opening, the adjacent ridge cap may require back-lapping or field cutting to provide the required opening distance.

• Erection Drawings

Refer to the erection drawings for specific ventilator locations and special construction requirements.

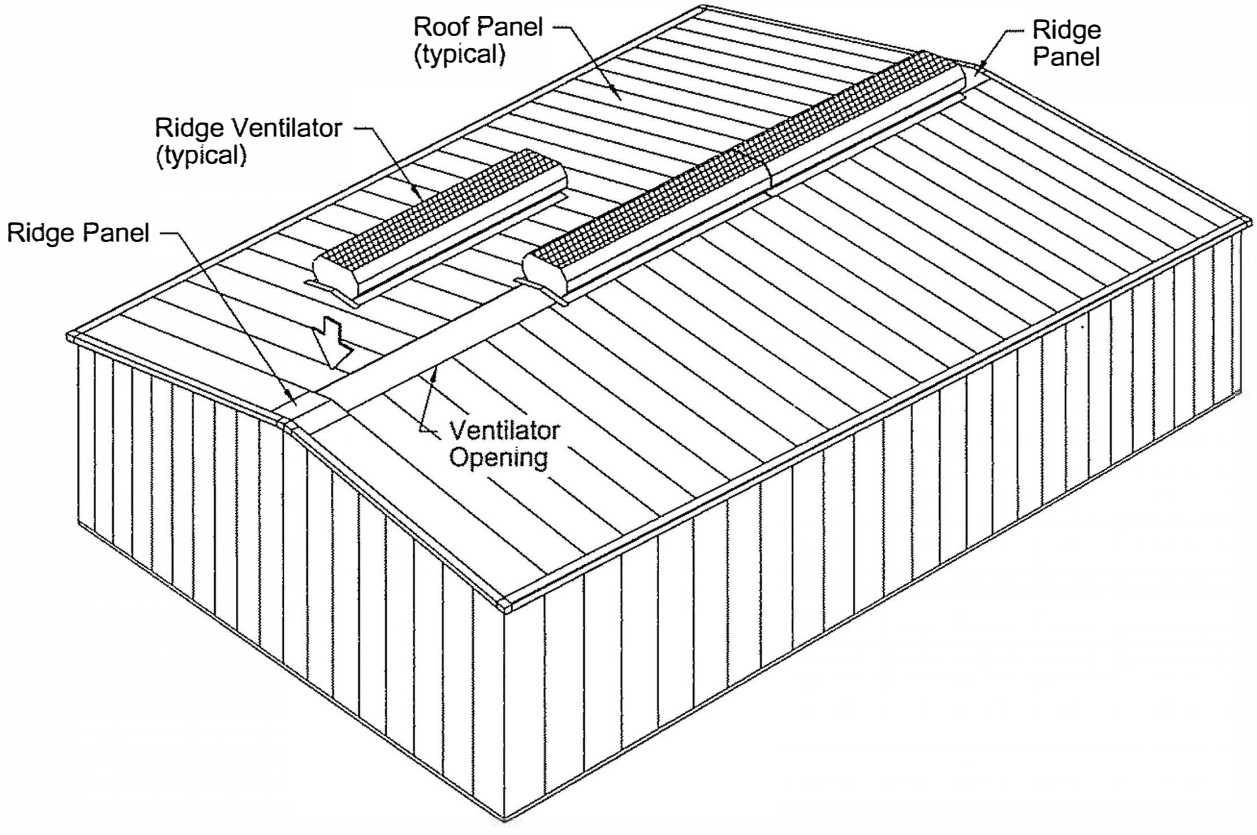

14.2 Prepare Ridge Opening

• Apply Tape Sealant

Apply sealant across the ends of the roof panels along the length of the opening. Align the sealant with the downslope edge of the purlin flange.

Extend the sealant onto the rib of the ridge cap at each end of the opening.

• Apply End Sealant

Apply sealant along the rib of the ridge cap across the full width of the ridge vent at each end of the opening.

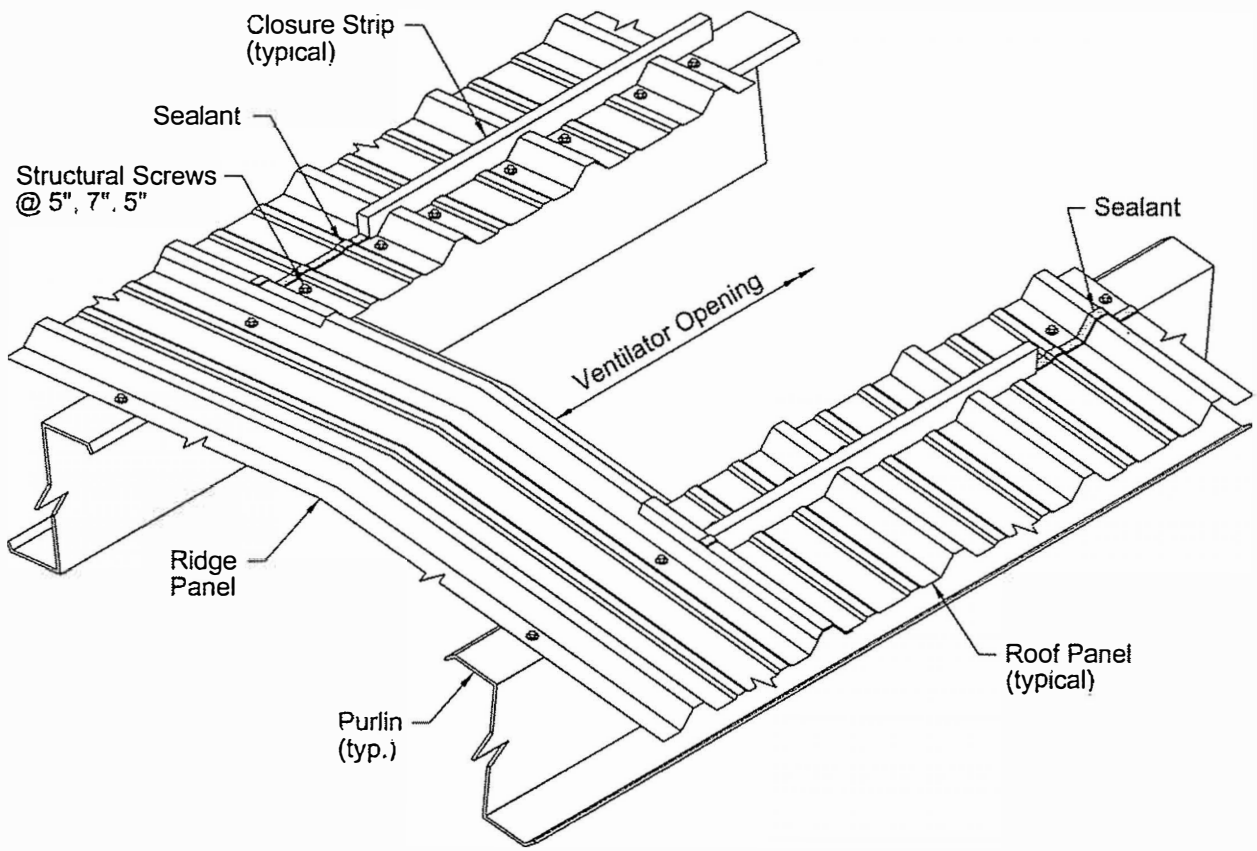

14.3 Install the Ridge Ventilator

• Install Gutter Support

At each end of the opening install a gutter support over the ridge cap ribs. Do not fasten at this time.

• Apply Channel Support Sealant

Apply caulking continuous along the top of the gutter support at each end of the opening.

• Install The Ventilator

Position the ventilator over the opening. Align the channel supports over the gutter supports and center the ventilator over the opening.

• Fasten the Ventilator

Along both sides of the ventilator, fasten the vent and roof panels to the purlins with structural fasteners at 5"-7"-5" on centers..

Install sidelap fasteners to secure the gutter support to the ridge cap.

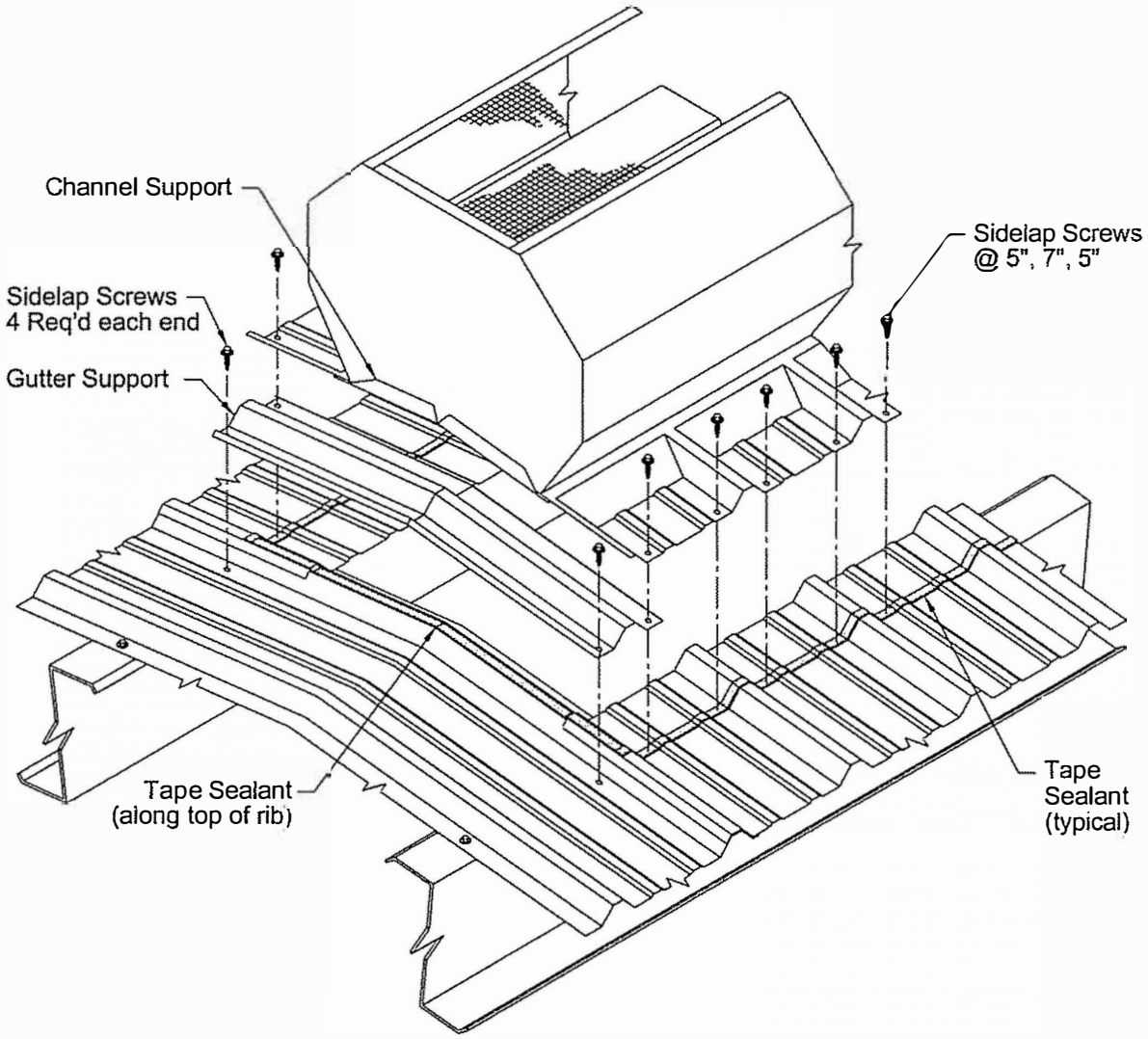

Skylights
14.4 General
• Erection
The standard skylights are translucent fiberglass panels which are installed in a similar manner as the roof panels.

• Trailing Sidelap
At the trailing edge of the skylight, the skylights rib must overlap the rib of the adjacent roof panel. This provides secure engagement of the sidelap screws into the underlapping steel roof panel.

• UL 90 Requirements
If your building is specified to have a UL 90 roof wind resistance rating, the skylight will be reinforced with sidelap channels and endlap straps.

The following instructions show the reinforcing channels and straps. These may be omitted if the UL 90 rating is not required.

• Erection Drawings
Refer to the erection drawings for the specific skylight location and assembly requirements.

14.5 Install Preceding Roof Panels
• Position and Fasten Panels
Install the panel run adjacent to the skylight and install the panel(s) downslope of the skylight.

Caution: Do not fasten the upslope end of the roof panel to the purlin at this time.

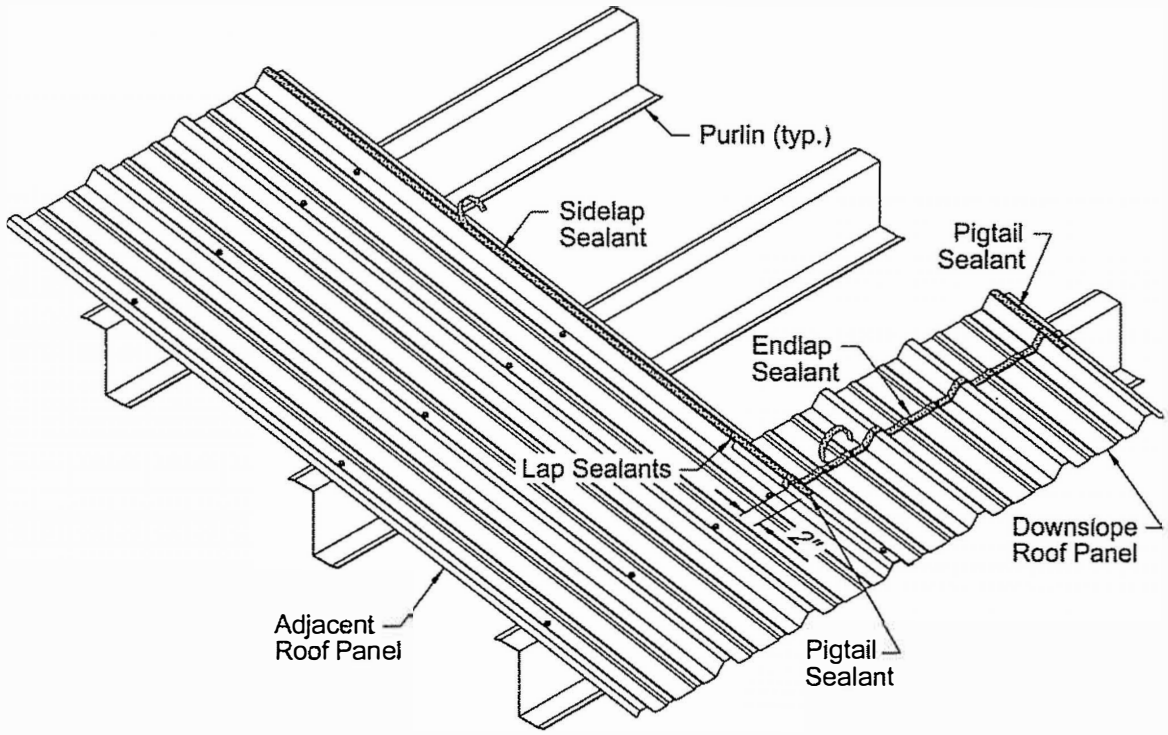

• Apply Sidelap Sealant
Apply sidelap sealant along the trailing rib of the adjacent roof panel.

• Apply Endlap Sealant
Apply endlap sealant across the end of the downslope panel. Align the sealant with the edge of the purlin's flange.

• Apply Pigtail Sealant
Apply the pigtail sealants on both ribs of the downslope roof panel. Extend the sealant to lap the sidelap sealant on the adjacent panel and extend 2" below the endlap sealant.

14.6 Install Skylight Panel

• Position Skylight

Set the skylight panel in position over the adjacent panel's rib and 1" over the web of the downslope.

• Apply Endlap Sealant

Apply endlap sealant across the upslope end of the skylight. Align the sealant with the edge of the purlin web.

• Apply Pigtail Sealant

Apply pigtail sealant along both ribs of the skylight panel. Extend the sealant to lap the sidelap sealant on the adjacent panel and to extend 2" below the endlap sealant.

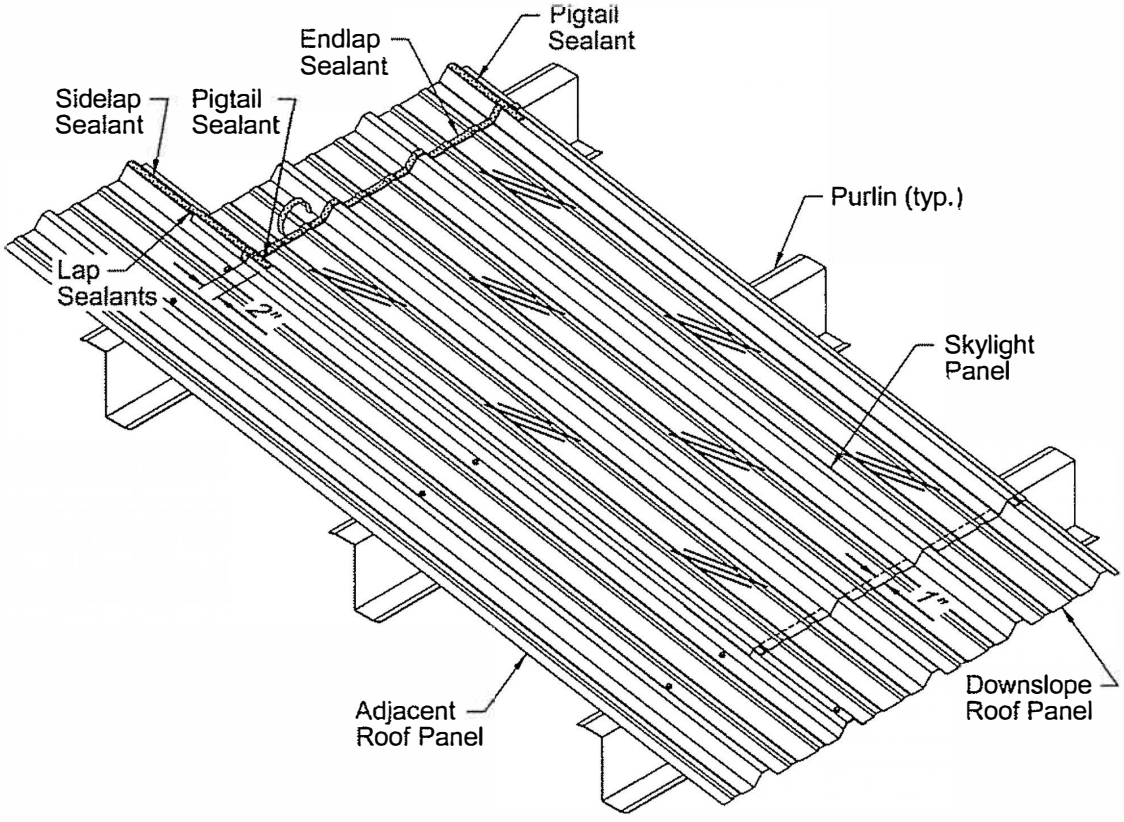

14.7 Complete Roof Panel Installation

• Install Upslope Roof Panel

Position the panel over the rib of the adjacent panel and over the end of the skylight panel. Align the panel's downslope end 1" below the web of the purlin.

• Apply Sidelap Sealant

Apply the sidelap sealant continuous along the trailing ribs of the installed roof and skylight panels.

• Install Adjacent Roof Panel

Position the adjacent roof panel over the rib of the installed roof and skylight panels.

• Fasten Roof Panels

Check the alignment of the roof panels and fasten the panels to the purlins and fasten the sidelaps in the normal manner.

Caution: Do not install fasteners at the perimeter of the skylight at this time.

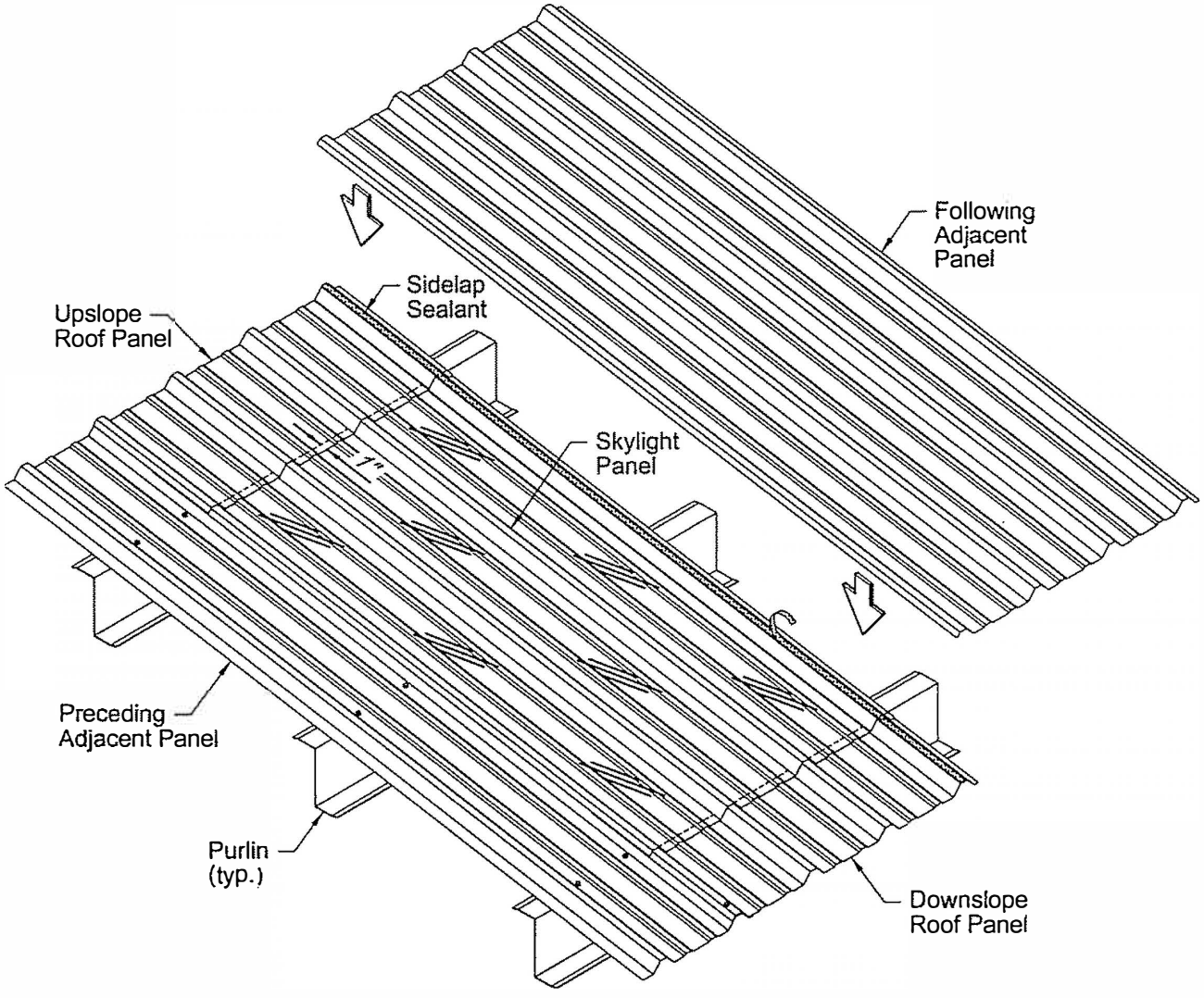

14.8 Reinforcement Straps & Channels

• Apply Endlap Caulking

Apply bead of caulking across the panel flats to seal the fastener penetration through the endlap straps.

Apply the caulking alogn the centerline of the purlin flange.

• Install Endlap Straps

Position an endlap strap over each endlap and intermediate purlins. Center the straps over the purlin flanges.

• Apply Sidelap Caulking

Apply continuous bead of caulking along the top of the ribs on each side of the skylight. Apply the caulking along the centerline of the rib.

• Install Sidelap Channels

Position a channel over the ribs on each side of the skylight. Align the ends of the channel to fit over the endlap straps.

Note: If the roof does not require a UL 90 wind resistance rating, the reinforcement straps and channels may be omitted.

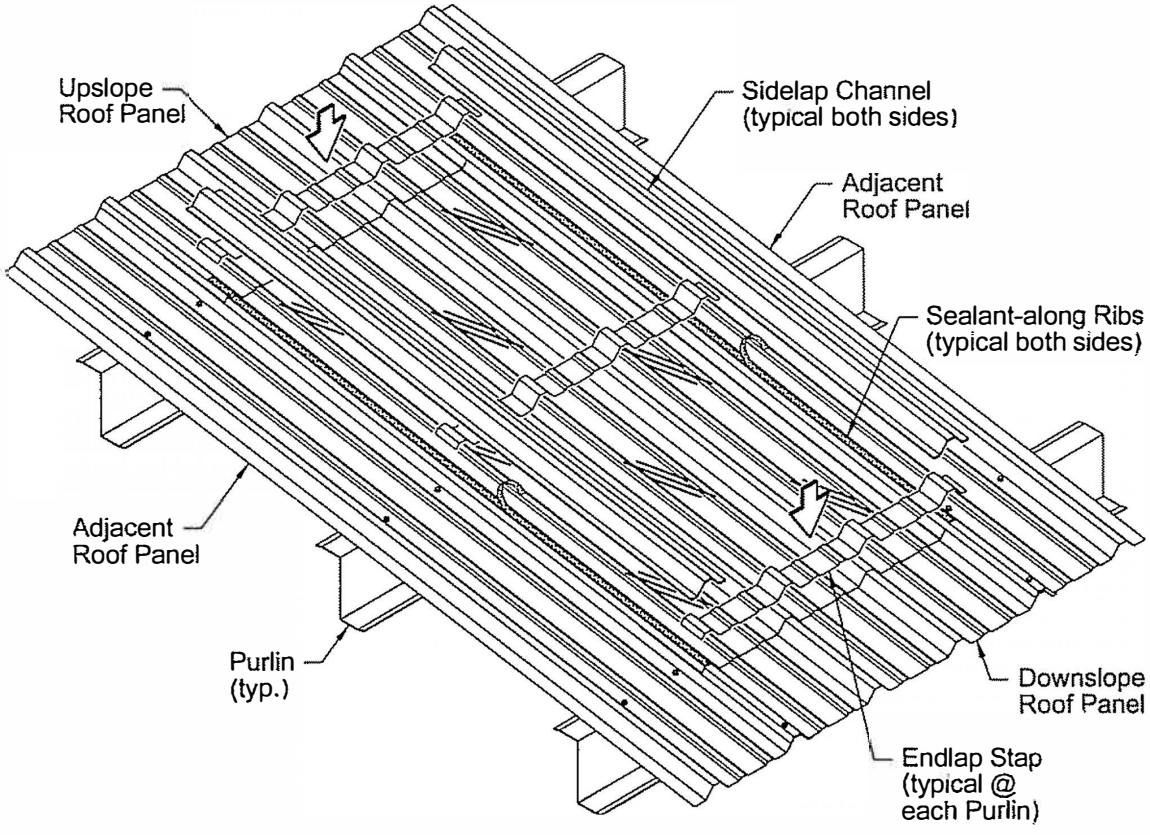

14.9 Fasten the Skylight

• Endlap Fasteners

At both endlaps and intermediate purlin, install structural fasteners at 5"/7"/5" on centers.

Check that the fasteners are located at the centerline of the purlin flanges.

• Sidelap Fasteners

Along each edge of the skylight, install sidelap fasteners at 12" on centers.

Check that the fasteners are located at the centerline of the lapping ribs.

Caution: Before installing the fasteners, check that the panels and reinforcing channels are correctly positions and the sealants are in position to seal the laps.

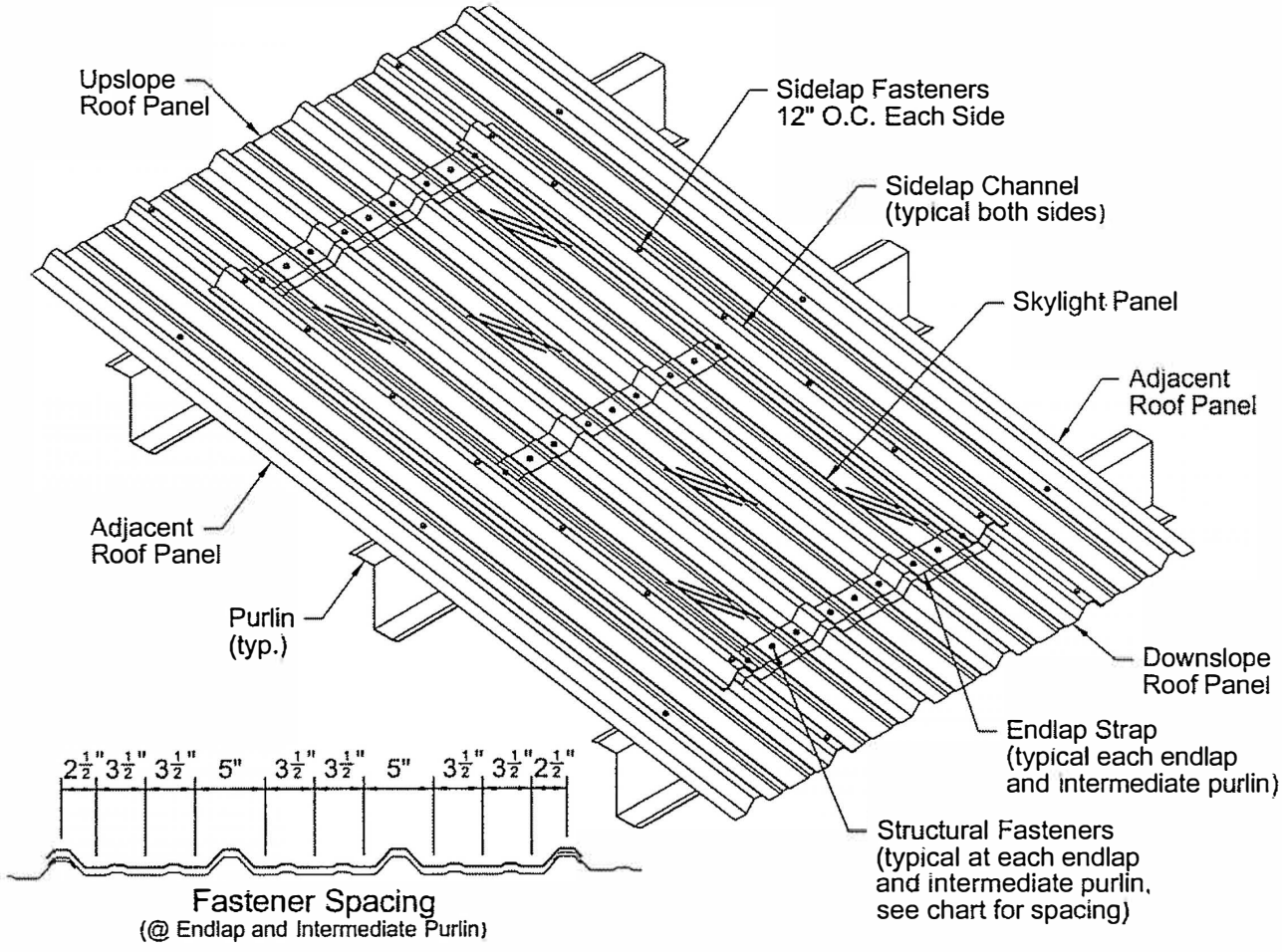

Appendix A
MBMA's Construction Site Safety Information

Reprinted from the MBMA Construction Site Safety Information Booklet

INTRODUCTION

This information is designed primarily for distribution to jobsite personnel for reference and review.

The Metal Building Manufacturers Association strongly feels that the most important single factor in avoiding the pain, suffering, and expense inherent in erection accidents is an individual's development of a "Safe Worker Attitude." MBMA feels this attitude is the best assurance of accident avoidance. This information suggests various field practices aimed at encouraging the development of the Safe Worker Attitude among all field employees.

While this information is a useful reminder, by no means is it all inclusive. It is not intended to be a substitute for a committed safety program specifically tailored to area and need. The requirements of all applicable federal or state OSHA Standards, and local statutes, ordinances, codes and similar regulations unique to each individual project must also be followed.

Alliance Steel, Inc., will supply erection drawings and instructions establishing the sequence of erection and appropriate connection of the Metal Building System components. The erection drawings are not intended to specify any particular method of erection to be followed by the Erector. The Erector remains solely responsible for the safety and appropriateness of all techniques and methods utilized by its crews in the erection of the Metal Building System. The Erector is also responsible for supplying any safety devices, such as scaffolds, runways, nets, etc., which may be required to safely erect the Metal Building System.

This information is a general review of safety considerations. It is not a substitute for safety programs, training, and supervision by erectors and builders who have the responsibility for safety on particular jobsites. MBMA and Alliance Steel, Inc. disclaims any and all liability or responsibility for jobsite safety, for the use of this information in connection with any particular jobsite, and for any omission from this information. Workers should consult their employers regarding safety considerations and procedures on the job.

A good safety program is the best insurance of keeping everyone, both employers and employees, in business. Each company should have a comprehensive safety program and safety training program.

PERSONNEL

1. **Qualifications**

   A. **Experience and Training Safety** procedures must be known or the employees must be proficient in each task which may be assigned. A competent person should conduct regular inspections of worksite activities to notice any hazards and take corrective actions.

   B. **Personal Habits** - Alcohol, drug usage and fatigue greatly increase the risk of serious accidents. No person under the influence should work. Professional counseling or termination is recommended for all persons suffering from these effects.

   C. **Attitude** - Each worker must be alert and devote full attention to the job at hand. Workers prone to horseplay, lack of respect for authority, carelessness and/or emotional strain are easily distracted from the task, an invitation to injury of themselves and others.

   D. **Physical Condition** - Workers should not suffer from any physical disability that inhibits safe task performance.

2. **Apparel** - Workers should wear appropriate clothing for their assignment. Jewelry (especially rings) should not be worn while working. Workers must also possess or be furnished with protective clothing, gear and equipment and safety training or supervision required for the assigned task. The OSHA Construction Safety Regulations should be reviewed for specific requirements.

3. **Security** - Only authorized persons should be allowed on the jobsite. Visitors should be provided with protective gear and escorted at all times.

4. **Safety Meetings** - Regularly scheduled "toolbox" safety meetings should be an integral part of any safety program. All site personnel should be required to attend these meetings. Management commitment to the safety program is best demonstrated by frequent participation.

A. It may be advantageous to bring in an outside consultant periodically to evaluate the program and share observations and recommendations with the site personnel at those meetings.

5. **Accidents** - It is vital to everyone concerned that all accidents be reported, in detail, immediately. The proper forms (MBMA suggests the use of the OSHA Accident Report Forms or State Worker's Compensation Form) should be on file at the site office. The forms should be completed as soon as possible after an accident. If the incident includes a death, hospitalization, loss of work time, or restricted duties for the employee, this information must be posted on an OSHA 200 form. The OSHA 200 form must be maintained for each calendar year, and posted for the month of February in the following year.

JOBSITE CONDITIONS

1. **Overhead Power Lines and Underground Utilities** - Poles and wires which are potentially hazardous or interfere with the Erector's job performance should be disconnected, moved, or shielded during work hours. Overhead wires adjacent to the building site should be properly marked and barricaded and all equipment operators warned of the hazard. Any and all equipment and personnel must remain a minimum of 10 feet away from an overhead power line. Location of underground utilities should be properly and accurately marked. Each state has "one-call" numbers for this service.

2. **Excavations, Pits and Trenches** - Guardrails, barriers, or soil berms should be placed around all open pits. Substantial, weight supportable, covers may also be used.

3. **Weather Conditions** - Changing climactic conditions should be monitored so that work on unprotected portions of the building is not attempted during adverse weather. Workmen should not climb or work on elevated surfaces when exposed to snow, rain, electrical, or wind storms.

4. **Sanitary Facilities** - The number of sanitary facilities available should be in adequate proportion to the total number of people on the jobsite.

5. **Drinking Facilities** - Adequate drinking facilities should be provided, with individual or single service cups made available. A trash can should be near the drinking facilities for used cups.

6. **Danger Areas** - Appropriate warning signs and barricades should be installed and maintained around and in all hazardous areas or operations.

7. **Housekeeping** - The jobsite should be maintained in a well lighted, well ventilated, clean and orderly condition. Materials, tools and supplies should be safely stored and labeled when not in use.

A. **Tools and Equipment** - should be stored in a manner permitting easy access and maintenance as well as security.

B. **Temporary Materials Storage Areas** - should be planned and prepared prior to material arrival. Give due consideration to handling, weather and security. Twelve foot wide access paths should exist between stored material piles.

C. **Hazardous Materials** - should be stored only in approved safety containers. Storage areas should be well posted with appropriate warning signs and kept inaccessible to unauthorized persons. The appropriate fire extinguishers need to be made available near these areas.

D. **Trash** - should be contained in a designated area and removed on a regular basis. Each trade should have all its trash removed as it accumulates and upon completion of its part of the work.

8. **Site Emergencies** - Emergency accident procedures should be established, written and reviewed by all personnel on the jobsite prior to the commencement of any work. The telephone numbers and locations of local emergency medical services, hospitals and fire and police departments should be posted on bulletin boards and near the telephone.

A. **Jobsite First Aid** - A first aid kit is required to be on each job, be checked weekly, and have used items replaced immediately. The knowledge and location of the first aid kit should be a mandatory part of every employee's training.

TOOLS AND EQUIPMENT

1. Tools and Equipment should be used only for the purpose for which they were designed. Training should be given to each employee in the proper use of each tool or piece of equipment that could be used in a given work situation on the jobsite.

2. Electrical Tools and Equipment

A. Periodic inspections should be made of all power tools and cords. Any necessary repairs should be made by a certified technician. Damaged cords should be removed from service, repaired immediately or discarded. All inspection and repair work should be part of an ongoing tool maintenance program.

B. All non-double insulated tools should have a three wire grounding system and be protected by the use of a ground fault circuit interrupter. An assured equipment grounding program may be implemented as an alternative.

C. The employee should be fully knowledgeable of the proper use of each tool used. Employee's should operate the tool from a comfortable position without stretching to a work location in which the employee could lose balance and fall.

D. An electrical tool should not be operated in damp or wet conditions.

E. Always disconnect the power before changing drill bits, saw blades, etc.

F. Match the right tool to the job. Never force a tool beyond its limit and never try to "modify" a tool design. The proper guards are to be in place when operating a tool.

G. Power tools usually cause material ejection. Safety glasses and other similar guards and/or safety devices should always be used in conjunction with power tool operation. Refer to the manufacturer's information on the proper use of the tool.

H. Extension cords and plugs should be inspected frequently and kept in good condition with insulation and protective coating intact. Vehicles or equipment should not be permitted to run over unprotected lines. Extension cords should not be dragged over sharp surfaces such as eaves, panel edges or flanges. Plugs should never be yanked from sockets by the power cord.

I. Electrical panel boxes should be conveniently located in a protected, weather-proofed and secured area. Panel boxes should also be locked at the end of each work day.

3. Power Actuated Tools - should only be used by qualified persons certified in their use.

A. Never leave a power actuated tool unattended.

B. Load only immediately prior to use. Never keep a "live" tool on hand even for a short period of time.

C. A power actuated tool is never to be driven into easily penetrated materials, or very hard or brittle materials.

4. Cranes - Define the boom and cab swing range as a hazardous area and treat it as such.

A. A worker should never position himself under a lifted load for any reason.

B. Keep hands out of pinch points. Use hand hooks wherever possible.

C. Never stand in line with the boom, cab or load swing path.

D. A person knowledgeable in proper hand signals should be available on site to direct the crane operator.

5. Arc Welding - Only certified persons should be allowed to operate and service this equipment.

A. Ensure that all connections are insulated, secured and properly grounded.

B. Wear appropriate protective equipment, including welding hoods, with proper shade lenses, gloves, clothing, etc.

C. Never weld near flammable materials and always keep the weld area well ventilated. An appropriate fire extinguisher must be located nearby.

D. All people should be advised of and protected from dangerous and harmful aspects of the ultraviolet and infrared rays of the arc welding process. Where practical, a screen is to be placed to protect other construction personnel.

E. Guard and protect all areas below the welding process by installing barriers and signs.

F. Handle hot metal only with proper handling equipment.

6. Oxygen-Acetylene - Transportation, storage, handling and use of oxygen and acetylene supplies and equipment is extremely hazardous and must be performed with the utmost care.

A. All equipment must be in good condition and properly installed with tight connections, and in upright, secured cylinders.

B. Check for fitting leaks with soap solution. Never use a flame.

C. Wear appropriate protective gear.

D. Never let flame or sparks strike hoses, storage cylinders or regulators or operate near combustible materials. An appropriate fire extinguisher is to be located nearby.

E. Never use oil or grease on oxygen equipment.

F. Never use in a poorly ventilated area. Don't breath torching fumes. Use an exhaust fan if necessary.

G. Always perform the correct ignition and shut down sequences.

H. Never allow line pressures to exceed recommended maximums.

I. Stored Cylinders should be secured in an upright position and placed well apart in a highly ventilated area. Cylinders must be capped when not in use.

7. Ladders - All ladders should adhere to the specifications based upon the American Standard Safety Code for the construction, care and use of ladders as published by ASA, and normally found on decals on the ladder.

A. Ladders should be erected on stable and level surfaces with side rail extension no less than 36" above the landing (when an extension is not possible, install grab rails). Ladders should be tied, blocked or otherwise secured, both at the top and bottom, to prevent displacement.

B. Only single purpose ladders should be used. Do not use ladders with broken or missing rungs or steps, broken or split side rails, or other faulty or defective construction. Check metal ladders for corrosion of interiors of open end hollow rungs and do not use within 10 feet of electrical lines or equipment.

C. Portable ladders shall be of a length such that the employee is no higher than the third rung from the top. The ladder should be used at such an angle that the horizontal distance from the top support to the foot of the ladder is about one quarter of the working length of the ladder (the length along the ladder between the foot and top support). Ladders should not be used in a horizontal position as platforms, runways or scaffolds.

D. Ladders should not be placed in passageways, doorways, driveways or any location where they could possibly be displaced by activities being conducted on any other work, unless they are protected by barricades or guards at top and/or bottom.

E. Make sure the bottoms of work boots are free of oil, grease and mud before ascending a ladder.

8. Scaffolding - A competent person should be on the jobsite who recognizes hazards and is knowledgeable about scaffolding use. Fall protection is required whenever a working platform is 10 feet or more above a lower level.

A. Scaffolding should be inspected prior to each use and periodically during the shift for any hazard which would affect the suitability of use and stability.

B. Do not climb cross braces. Use a hook-on ladder, stairway, inclined ramp, integral prefabricated access frame or equivalent safe access to the scaffold platform.

C. Equip all planked platform areas with proper guardrails, including top rail, mid rails, and toe-boards along all open sides and ends of scaffold platforms, or use personal fall arrest equipment. Anchor the top of the scaffold frame to the adjacent structure at a 4:1 minimum base width to height configuration, then every 20 to 26 feet vertically, at the top, and then at each end and approximately every 30 feet horizontally along the platforms together.

D. Do not use ladders or makeshift devices on top of scaffolds to increase the height.

E. Never overload scaffolds. Scaffolds must be designed by a qualified person to support four times the maximum intended load.

F. Scaffold Platforms (Scaffold planks, prefabricated planks, fabricated decks, or fabricated platforms.)

1. If scaffold planks are desired, use only lumber that is properly inspected and graded as scaffold plank.

2. Secure platform to the scaffold with cleats or nail platforms together.

3. Used scaffold plallks may be reused provided they are not damaged or deteriorated. Check for splits, pitch streaks, pockets or holes.

4. Scaffold platforms of scaffold should be fully planked, leaving no more than 1" of space in between planks.

G. For mobile scaffolds, the following apply:

1. Do not ride mobile scaffolds, unless the floor is level and free from holes and the scaffold is less than two times as high as the minimum base width. Secure caster brakes after moving.

2. Secure or remove all material and equipment from platform before moving scaffold. Never throw or drop things from the scaffold.

3. The working platform height of mobile scaffolds should not exceed four times the minimum base dimension unless guyed or otherwise stabilized.

4. Check for clearance of overhead power lines, surface holes, pits or obstructions before moving the scaffold.

5. Avoid using scaffolds in slippery or windy conditions.

9. Fire Extinguishers - should be readily accessible and in the vicinity of all heat producing activities, hazardous material areas, storage areas and construction areas.

A. Routine checks should be made to ensure extinguishers are fully pressurized and in working order in case of an emergency.

B. Clearly post all extinguisher locations.

C. Each extinguisher should be clearly labeled with instructions for its use.

D. Employees should be trained in the proper use of an extinguisher and in the beginning stage of fire-fighting.

10. First Aid - First aid kits should be readily accessible throughout the jobsite.

A. Every employee should know the location of first aid kits at the construction site.

MATERIAL HANDLING

1. Hoisting - Many construction accidents occur when handling or moving materials.

A. General

1. All material handling equipment operators should be properly trained on each type of equipment they operate.

2. All operators should be competent in the use of the particular crane or equipment in accordance with all local, state and federal requirements.

B. Signaling

1. There should be only one person directing the crane operator at any given time, and this person must be knowledgeable of the proper hand signals.

2. There should be a thorough understanding of signal gestures between the designated signal man and the crane operator.

3. The signal man should remain in clear view of the operator and maintain a clear view of the load at all times.

4. Overhead loads should be the sole responsibility of the signal man. He should alert everyone in the area of activity prior to the actual lift. He should also alert them as to when area handling operations have ceased and the work may proceed with "normal caution."

C. Loads

1. Overhead loads should be checked prior to hoisting to ensure freedom from loose bolts, nuts, washers, rocks, mud, tools and/or anything else that could fall free during the lift.

2. Overhead loads should never be hoisted over other employees.

3. Suspended loads should never be left untended.

4. Chokers, slings, spreaders and all other equipment used in handling overhead loads should be frequently inspected by a competent person. Cuts, kinks, excessive wear or anything that could result in failure should be looked for. This equipment should NEVER be used as a ground for welding.

5. The designated load limits and reach of the hoisting equipment should be prominently displayed on the equipment, visible to the operator, known and never exceeded. Determine the load weight before hoisting, and use proper rigging techniques.

6. All loads should be properly balanced and tag lines used to maintain balance and control.

7. Bundles should be tightly choked to prevent loose pieces from shifting or sliding free. If the material is fragile, a basket sling is the preferred lifting means.

8. Loads should be handled at minimum heights and safe clearances (15' or more) of obstructions such as guy and anchor lines, tag lines and load lines and overhead power lines.

9. Slings and chokers should be utilized in accordance with the manufacturer's recommendations and load ratings.

2. Unloading

A. Appropriate personal protective equipment should be worn when unloading for the purpose of safety and material protection.

B. The unloading and storage plan should be understood by the entire crew. Less handling provides less opportunity for accidents.

C. Everyone should be aware of the potential danger of loads that have shifted in transit. They may shift again during unloading.

D. Always keep hands and feet clear of and from under material.

E. No employee is allowed to ride the headache ball, loads or hooks.

F. Blocking should be used under unloaded materials for ease of placing and removing chokers and slings.

3. Lifting - Each employee should know and use proper rigging and lifting techniques.

A. Inspect material edges for hand hazards.

B. Use gloves that are free of grease and oil.

C. Avoid pinch points.

D. Follow OSHA regulations for height, symmetry and stability in material stacking.

STEEL ERECTION

1. Structural Steel - Fall protection is required for those employees more than 25 feet above a lower level at the exterior of the building, where no safety lines, scaffolds, catch platforms or fall arrest equipment is in use. A substantially planked temporary floor must be within 30 feet or two stories, whichever is less, to the inside of a building.

A. Each structural component should be properly located and fully and adequately stabilized with tie-offs or tie-ins before the hoisting equipment is released.

B. As erection of the building progresses, completely braced bay(s) should be periodically established and strategically located with all secondary support steel plumb and tight, with appropriate temporary guys on construction bracing in place.

C. Extreme care must be taken when handling large surface area materials in windy conditions. Most crane operations should cease when wind velocity exceeds limits established by the crane manufacturer.

D. Employees should never climb or slide down columns or other structural members. Ladders should be used to get on and off the building. Wall girts and diagonal brace angles should not be used as ladders. A personal hoist should be used to transport employees to and from high building areas.

E. No incomplete components or component assemblies should be left standing at the end of a work day unless they are fully stabilized.

2. Sheeting

A. Scaffolding or some other type of secure platform should be used to access areas where the first run of roof sheets is to be placed and secured.

B. Employees should be trained to recognize fall hazards when working around roof top skylights and unfinished openings. Each of these should be properly guarded or covered.

C. Sheeting operations should only be conducted in light wind or no wind conditions.

D. Always use gloves when handling sheeting.

E. Use proper fall protection methods when working on all sloped roofs and decks.

1. Morning frost or dew conditions can be very hazardous. Covering at night, temporary tractive covers, devices, or supports are recommended.

2. Unsecured panels may collapse. Do not step on raised edge of panel, near crease in raised edge, or within five feet of end of panel.

3. Waxed or oiled sheets are slippery. Use proper fall protection safety measures and possibly walkboards on panels at edge of roof.

4. Insulation - Fall protection measures should be taken when insulation is exposed. Rigid and blanket insulation will not support a worker!

5. Leading edge work must comply with the current OSHA Standards.

3. For Complete Information - refer to Department of Labor, Occupational Safety and Health Administration -29 CFR Parts 1926 - Safety Standards for Fall Protection in the Construction Industry.

ROOFING ERECTION

1. When Working Above the Ground, the potential for injury due to falling is great. During the erection of a roof, each employee must be trained in fall hazard awareness, and a fall protection plan should be developed and implemented. Fall protection is required for those employees more than six feet above a lower level.

A. Panels not fully secured can collapse - the steel panels must be secured prior to employee use as a work location.

B. Slippery surfaces (from wax, oil, grease, snow, rain, ice or dew) must be recognized and eliminated prior to employee use as a work location.

C. Do not step, kneel, or place weight on the raised edges of panels or edge corrugations, or near any damaged, creased, or kinked areas.

D. Do not stand or work within five feet from the end of a panel that is not fully supported and secured, unless walkboards are used.

E. When fastening panels, stand toward the middle and away from the raised edge or edge corrugations. Stand directly over the roof structural support.

F. No more than one employee should work within the same panel span.

G. When working or walking on attached panels, stay away from sidelaps and take long steps to stand only on an area above a roof structural support.

H. Never use a single roof panel as a work platform, or step on stacks of roof panels lying unattached on roof structural supports.

2. Safety Precautions

A. To prevent panels from collapsing, place walkboards on panels not fully secured to roof structural supports and to other panels on each side. Walkboards should run the full length of panel and be fastened to the next walkboard.

B. To provide a work platform, an 18" wide prefabricated plank, deck, platform, or a minimum of two scaffold planks may be used with guardrails installed along each unprotected edge or side.

1. Other means may include securing panels to roof structural supports by clamps, securing walkboards to the panel and devising a fall protection plan.

3. Fall Protection

There are many fall protection devices, methods, and types of equipment available, and each contractor is responsible for ensuring that employees are adequately protected when working at an elevated height.

Available equipment includes guardrails, covers, safety nets, personal fall arrest devices and positioning devices. Also available are written fall protection plans, controlled access zones, roof warning line systems, safety monitors, and site-specific written plans prepared by a qualified person.

Manufactured products are available for roof clamps, warning line stanchions, horizontal lifeline posts, anchors, etc.

OSHA provides for contractors to develop and use devices designed by qualified persons or structural engineers.

Leading edge work can be conducted using personal fall arrest equipment, safety nets, guardrails, or a combination of controlled access zones and safety monitors, or active fall management programs designed by a qualified person.

Roofing work includes the installation, hoisting or demolition of roofing materials, including vapor barrier, insulation and sheet metal.